Heating & Air Conditioning
Amana®
AMERICA'S BRAND FOR COMFORT™

ASXC7

High-Efficiency Split-System Air Conditioner Up to 17.2 SEER2 2 To 5 Tons

Contents

Nomenclature..... 2
Product Specifications..... 3
Expanded Cooling Data 4
Performance Data 20
Wiring Diagram..... 22
Dimensions 23
Accessories 23

ComfortBridge™ technology

CoolCloud™

Standard Features

- Two-Stage Copeland Ultra-Tech scroll compressor
- Quiet two-speed ECM outdoor fan motor
- Integrated communicating ComfortBridge™ Technology
- Commissioning and diagnostics via Bluetooth indoor board via CoolCloud™ App
- Copeland® ComfortAlert™ built in diagnostics
- Copper tube/ enhanced aluminum fin coil-5mm on 2.0-3.0T
- Color-coded terminal strip for non-communicating set-up
- Only two low-voltage wires required in communication mode
- Factory-installed filter drier
- Factory-installed transformer
- Factory-installed high and low-pressure switches
- High-density foam compressor sound blanket
- Fully charged for 15' of tubing length
- Ambient temperature sensors
- Ground lug connection
- AHRI Certified- ETL Listed

Cabinet Features

- Removable grille-style top design compliant with UL 60335-2-40
- New venturi for improved airflow and less noise
- Heavy-gauge galvanized steel cabinet
- Baked-on powder-paint finish with 500-hour salt-spray approval
- Steel louver coil guard with Rust-resistant screws.
- Top and side maintenance access
- Single-panel access to controls with space for field-installed accessories
- Service valves with sweat connections and easy-access gauge ports
- When properly anchored, meets the 2020 Florida Building Code unit integrity requirements for hurricane-type winds (Anchor bracket kits available.)

ASK ABOUT ENERGY STAR

Proper sizing and installation of equipment is critical to achieving optimal performance. Split system air conditioners and heat pumps must be matched with appropriate coil components to meet ENERGY STAR® criteria. Ask your contractor for details or visit www.energystar.gov.

LIFE TIME UNIT REPLACEMENT LIMITED WARRANTY*

10 YEAR PARTS LIMITED WARRANTY*

Intertek

AHRI CERTIFIED®

COMPANY WITH QUALITY SYSTEM CERTIFIED BY DNV GL ▪ ISO 9001 ▪

COMPANY WITH ENVIRONMENTAL SYSTEM CERTIFIED BY DNV GL ▪ ISO 14001 ▪

* Complete warranty details available from your local dealer or at www.amana-hac.com. To receive the Lifetime Unit Replacement Limited Warranty (good for as long as you own your home) and 10-Year Parts Limited Warranty, online registration must be completed within 60 days of installation. Online registration is not required in California or Québec.

Amana® is a registered trademark of Maytag Corporation or its related companies and is used under license. All rights reserved.

A	S	X	C	7	0	3 6	1	0	A	A
1	2	3	4	5	6	7,8	9	10	11	12

Brand

A Amana

Product Category

S Split System R-410A

Unit Type

X Condenser

Z Heat Pump

Feature

N	Value	H	Enhanced
B	Classic	C	Premium
M	Multi-Family	V	Ultimate

SEER2

13.4- 13.7 = 3	16.6- 17.5 = 7
13.8- 14.5 = 4	17.6- 18.5 = 8
14.6- 15.5 = 5	18.6- 19.5 = 9
15.6- 16.5 = 6	19.6 + = 0

Minor Rev

A

Major Revisions

A

Variation

Electrical

208/230 V, 1 Phase, 60 Hz

Nominal Capacity

18- 1.5 Ton	42- 3.5 Tons
24- 2.0 Tons	48- 4.0 Tons
30- 2.5 Tons	60- 5.0 Tons
36- 3.0 Tons	

Sales Region

N North

S Southeast & North

0 All Regions

	ASXC7 02410A*	ASXC7 03610A*	ASXC7 04810A*	ASXC7 06010A*
COOLING CAPACITY				
Nominal Cooling (BTU/h)	24,000	36,000	48,000	60,000
Decibels (High/Low) [3]	71	72	74	75
COMPRESSOR				
RLA	10.0	14.8	20.4	23.7
LRA	62.9	84.2	122.1	147.2
Stage	Two	Two	Two	Two
Type	Scroll	Scroll	Scroll	Scroll
CONDENSER FAN MOTOR				
Motor Type	ECM	ECM	ECM	ECM
Horsepower (RPM)	⅓	⅓	⅓	⅓
FLA	2.80	2.80	2.80	2.80
REFRIGERATION SYSTEM				
Refrigerant Line Size[1]				
Liquid Line Size (“O.D.)	⅜"	⅜"	⅜"	⅜"
Suction Line Size (“O.D.)	¾"	⅞"	1⅛"	1⅛"
Refrigerant Connection Size				
Liquid Valve Size (“O.D.)	⅜"	⅜"	⅜"	⅜"
Suction Valve Size (“O.D.)	¾"	¾"	⅞"	⅞"
Valve Connection Type	Sweat	Sweat	Sweat	Sweat
Refrigerant Charge	105	109	195	209
Expansion Device	TXV	TXV	TXV	TXV
ELECTRICAL DATA				
Voltage-Phase-Hz	208/230-1	208/230-1	208/230-1	208/230-1
Minimum Circuit Ampacity [1]	15.3	24.1	28.3	32.4
Max. Overcurrent Protection [2]	25	40	45	50
Min / Max Volts	197 / 253	197 / 253	197 / 253	197 / 253
Electrical Conduit Size	½" or ¾"	½" or ¾"	½" or ¾"	½" or ¾"
EQUIPMENT WEIGHT (LBS)	214	216	276	283
SHIP WEIGHT (LBS)	236	238	298	305
ENERGY STAR® CERTIFIED ^	ENERGY STAR	ENERGY STAR	ENERGY STAR	ENERGY STAR

^ ENERGY STAR NOTES

- Proper sizing and installation of equipment is critical to achieving optimal performance. Split system air conditioners and heat pumps must be matched with appropriate coil components to meet ENERGY STAR® criteria. Ask your contractor for details or visit www.energystar.gov.
- The www.energystar.gov website provides up-to-date system combinations certified to meet ENERGY STAR® requirements.

[1] Line sizes denoted for 25’ line sets, tested and rated in accordance with ARI Standard 210/240. For other line set lengths or sizes, refer to the Installation Instructions and/or the Long Line Set Applications guide.

[2] Installer will need to supply ¾” to ⅞” adapters for suction line connections.

[3] Installer will need to supply ⅞” to 1⅛” adapters for suction line connections.

[4] Unit is factory charged with refrigerant for 15’ of ⅜” liquid line. System charge must be adjusted per the Final Charge Adjustment procedure found in the Installation Instructions.

[5] Wire size should be determined in accordance with National Electrical Codes; extensive wire runs will require larger wire sizes

[6] Must use time-delay fuses or HACR-type circuit breakers of the same size as noted.

NOTES

- Always check the S&R plate for electrical data on the unit being installed.

Expanded Cooling Data — ASXC702410A*+CA*TA2422*4A*+EEP - High Stage

			Outdoor Ambient Temperature																							
			65ºF				75ºF				85ºF				95ºF				105ºF				115ºF			
			Entering Indoor Wet Bulb Temperature																							
IDB	Airflow		59	63	67	71	59	63	67	71	59	63	67	71	59	63	67	71	59	63	67	71	59	63	67	71
70	700	MBh	23.2	23.5	24.2	-	23.0	23.3	24.0	-	22.4	22.7	23.4	-	21.3	21.7	22.4	-	20.1	20.4	21.1	-	18.9	19.2	19.9	-
		S/T	0.58	0.51	0.38	-	0.59	0.52	0.39	-	0.61	0.54	0.41	-	0.63	0.56	0.43	-	1.00	0.58	0.45	-	1.00	0.63	0.50	-
		ΔT	19	17	14	-	19	17	14	-	19	17	14	-	19	17	14	-	18	17	13	-	20	18	15	-
		kW	1.41	1.41	1.41	-	1.56	1.56	1.56	-	1.73	1.73	1.72	-	1.91	1.91	1.90	-	2.11	2.11	2.10	-	2.34	2.34	2.34	-
		Amps	4.6	4.6	4.6	-	5.3	5.2	5.2	-	6.0	6.0	6.0	-	6.8	6.7	6.7	-	7.6	7.6	7.6	-	8.6	8.6	8.6	-
		Hi PR	231	232	234	-	268	269	270	-	306	307	308	-	347	348	350	-	391	392	394	-	439	440	441	-
		Lo PR	123	124	127	-	130	132	135	-	137	138	141	-	142	144	147	-	148	149	152	-	154	156	159	-
	800	MBh	23.5	23.8	24.5	-	23.3	23.6	24.3	-	22.7	23.0	23.7	-	21.6	22.0	22.7	-	20.4	20.7	21.4	-	19.2	19.5	20.2	-
		S/T	0.64	0.57	0.44	-	0.65	0.57	0.44	-	0.67	0.60	0.47	-	1.00	0.62	0.49	-	1.00	0.64	0.51	-	1.00	0.69	0.56	-
		ΔT	18	16	13	-	18	16	13	-	18	16	13	-	18	16	13	-	17	16	12	-	18	17	14	-
		kW	1.42	1.42	1.42	-	1.57	1.57	1.56	-	1.73	1.73	1.73	-	1.91	1.91	1.91	-	2.11	2.11	2.11	-	2.35	2.35	2.35	-
		Amps	4.6	4.6	4.6	-	5.3	5.3	5.3	-	6.0	6.0	6.0	-	6.8	6.8	6.8	-	7.7	7.7	7.6	-	8.7	8.7	8.7	-
		Hi PR	233	234	236	-	270	271	272	-	308	309	310	-	349	350	352	-	393	394	396	-	441	442	443	-
		Lo PR	124	126	129	-	132	133	136	-	138	140	143	-	144	145	149	-	149	151	154	-	156	158	161	-
	880	MBh	23.8	24.1	24.8	-	23.6	23.9	24.6	-	23.0	23.3	24.0	-	21.9	22.3	23.0	-	20.7	21.0	21.7	-	19.5	19.8	20.5	-
		S/T	0.67	0.60	0.46	-	0.67	0.60	0.47	-	0.70	0.63	0.49	-	1.00	0.64	0.51	-	1.00	0.67	0.53	-	1.00	0.71	0.58	-
		ΔT	17	15	12	-	17	15	12	-	17	15	12	-	17	15	12	-	17	15	12	-	18	16	13	-
		kW	1.43	1.42	1.42	-	1.57	1.57	1.57	-	1.74	1.74	1.74	-	1.92	1.92	1.92	-	2.12	2.12	2.12	-	2.36	2.35	2.35	-
		Amps	4.7	4.7	4.6	-	5.3	5.3	5.3	-	6.0	6.0	6.0	-	6.8	6.8	6.8	-	7.7	7.7	7.7	-	8.7	8.7	8.7	-
		Hi PR	235	236	237	-	271	272	274	-	309	310	312	-	350	351	353	-	395	396	397	-	442	443	445	-
		Lo PR	126	127	131	-	133	135	138	-	140	141	145	-	145	147	150	-	151	152	156	-	158	159	162	-
75	700	MBh	23.2	23.5	24.2	25.3	23.0	23.3	24.0	25.1	22.4	22.7	23.4	24.5	21.4	21.7	22.4	23.4	20.1	20.4	21.1	22.2	18.9	19.2	19.9	21.0
		S/T	0.71	0.63	0.50	0.4	0.71	0.64	0.51	0.4	1.00	0.66	0.53	0.4	1.00	0.68	0.55	0.4	1.00	0.70	0.57	0.4	1.00	1.00	0.62	0.5
		ΔT	23	21	18	14	22	21	18	14	23	21	18	14	22	21	18	14	22	21	17	14	23	22	18	15
		kW	1.41	1.41	1.41	1.4	1.56	1.56	1.56	1.6	1.73	1.72	1.72	1.7	1.91	1.90	1.90	1.9	2.11	2.10	2.10	2.1	2.34	2.34	2.34	2.3
		Amps	4.6	4.6	4.6	4.6	5.2	5.2	5.2	5.3	6.0	6.0	6.0	6.0	6.7	6.7	6.7	6.8	7.6	7.6	7.6	7.7	8.6	8.6	8.6	8.7
		Hi PR	231	232	234	238.0	268	269	270	274.4	306	307	309	312.6	347	348	350	353.8	391	392	394	398.1	439	440	441	445.5
		Lo PR	123	124	127	132.5	130	132	135	139.9	137	138	141	146.5	142	144	147	152.0	148	149	152	157.4	154	156	159	164.2
	800	MBh	23.5	23.8	24.5	25.6	23.3	23.6	24.3	25.4	22.7	23.0	23.7	24.8	21.7	**22.0**	22.7	23.7	20.4	20.7	21.4	22.5	19.2	19.6	20.2	21.3
		S/T	0.76	0.69	0.56	0.4	0.77	0.70	0.57	0.4	1.00	0.72	0.59	0.5	1.00	**0.74**	0.61	0.5	1.00	0.76	0.63	0.5	1.00	1.00	0.68	0.5
		ΔT	21	20	17	13	21	20	16	13	22	20	17	13	21	**20**	16	13	21	19	16	13	22	21	17	14
		kW	1.42	1.42	1.42	1.43	1.57	1.57	1.56	1.58	1.73	1.73	1.73	1.74	1.91	**1.91**	1.91	1.92	2.11	2.11	2.11	2.12	2.35	2.35	2.35	2.36
		Amps	4.6	4.6	4.6	4.7	5.3	5.3	5.3	5.3	6.0	6.0	6.0	6.0	6.8	**6.8**	6.8	6.8	7.7	7.6	7.6	7.7	8.7	8.7	8.7	8.7
		Hi PR	233	234	236	239.9	270	271	272	276.4	308	309	311	314.6	349	**350**	352	355.7	393	394	396	400.1	441	442	443	447.4
		Lo PR	124	126	129	134.3	132	133	137	141.7	138	140	143	148.3	144	**145**	149	153.8	149	151	154	159.2	156	158	161	166.0
	880	MBh	23.8	24.1	24.8	25.9	23.6	23.9	24.6	25.7	23.0	23.3	24.0	25.1	21.9	22.3	23.0	24.0	20.7	21.0	21.7	22.8	19.5	19.8	20.5	21.6
		S/T	0.79	0.72	0.59	0.5	1.00	0.73	0.59	0.5	1.00	0.75	0.62	0.5	1.00	0.77	0.64	0.5	1.00	0.79	0.66	0.5	1.00	1.00	0.71	0.6
		ΔT	21	19	16	12	21	19	16	12	21	19	16	13	21	19	16	12	20	19	16	12	22	20	17	13
		kW	1.42	1.42	1.42	1.4	1.57	1.57	1.57	1.6	1.74	1.74	1.73	1.7	1.92	1.92	1.91	1.9	2.12	2.12	2.12	2.1	2.35	2.35	2.35	2.4
		Amps	4.7	4.7	4.6	4.7	5.3	5.3	5.3	5.3	6.0	6.0	6.0	6.1	6.8	6.8	6.8	6.8	7.7	7.7	7.7	7.7	8.7	8.7	8.7	8.7
		Hi PR	235	236	237	241.4	271	272	274	277.9	309	310	312	316.1	351	352	353	357.3	395	396	398	401.6	442	443	445	448.9
		Lo PR	126	128	131	135.8	133	135	138	143.3	140	141	145	149.8	146	147	150	155.4	151	152	156	160.8	158	159	162	167.6

IDB = Entering Indoor Dry Bulb Temperature

High and low pressures are measured at the liquid and suction service valves.

Shaded area is ACCA (TVA) conditions

kW = Total system power

Amps = outdoor unit amps (comp.+fan)

Expanded Cooling Data — ASXC702410A*+CA*TA2422*4A*+EEP - High Stage (cont.)

			Outdoor Ambient Temperature																							
			65ºF				75ºF				85ºF				95ºF				105ºF				115ºF			
			Entering Indoor Wet Bulb Temperature																							
IDB	Airflow		59	63	67	71	59	63	67	71	59	63	67	71	59	63	67	71	59	63	67	71	59	63	67	71
80	700	MBh	23.3	23.7	24.4	25.4	23.1	23.5	24.1	25.2	22.5	22.8	23.5	24.6	21.5	21.8	22.5	23.6	20.2	20.5	21.2	22.3	19.0	19.4	20.1	21.1
		S/T	1.00	0.75	0.62	0.5	1.00	0.76	0.63	0.5	1.00	0.78	0.65	0.5	1.00	0.80	0.67	0.5	1.00	1.00	0.69	0.6	1.00	1.00	0.74	0.6
		ΔT	26	25	21	18	26	25	21	18	27	25	22	18	26	25	21	18	26	24	21	18	27	25	22	19
		kW	1.41	1.41	1.41	1.4	1.56	1.56	1.56	1.6	1.73	1.73	1.72	1.7	1.91	1.90	1.90	1.9	2.11	2.11	2.10	2.1	2.34	2.34	2.34	2.3
		Amps	4.6	4.6	4.6	4.6	5.3	5.2	5.2	5.3	6.0	6.0	6.0	6.0	6.8	6.7	6.7	6.8	7.6	7.6	7.6	7.7	8.6	8.6	8.6	8.7
		Hi PR	232	233	234	238.4	268	269	271	274.9	306	307	309	313.1	348	349	350	354.2	392	393	395	398.6	439	440	442	445.9
		Lo PR	123	125	128	133.0	131	132	135	140.5	137	139	142	147.0	143	144	147	152.5	148	150	153	157.9	155	156	160	164.7
	800	MBh	23.6	24.0	24.7	25.7	23.4	23.8	24.4	25.5	22.8	23.1	23.8	24.9	21.8	22.1	**22.8**	23.9	20.5	20.8	21.5	22.6	19.3	19.7	20.4	21.4
		S/T	1.00	0.81	0.68	0.5	1.00	0.82	0.69	0.6	1.00	0.84	0.71	0.6	1.00	1.00	**0.73**	0.6	1.00	1.00	0.75	0.6	1.00	1.00	0.80	0.7
		ΔT	25	24	20	17	25	24	20	17	26	24	21	17	25	24	**20**	17	25	23	20	17	26	24	21	18
		kW	1.42	1.42	1.42	1.43	1.57	1.57	1.56	1.58	1.73	1.73	1.73	1.74	1.91	1.91	**1.91**	1.92	2.11	2.11	2.11	2.12	2.35	2.35	2.35	2.36
		Amps	4.6	4.6	4.6	4.7	5.3	5.3	5.3	5.3	6.0	6.0	6.0	6.0	6.8	6.8	**6.8**	6.8	7.7	7.7	7.6	7.7	8.7	8.7	8.7	8.7
		Hi PR	234	235	236	240.4	270	271	273	276.8	308	309	311	315.0	350	351	**352**	356.2	394	395	396	400.5	441	442	444	447.8
		Lo PR	125	126	130	134.8	132	134	137	142.3	139	140	144	148.8	144	146	**149**	154.3	150	151	155	159.7	157	158	161	166.5
	880	MBh	23.9	24.2	24.9	26.0	23.7	24.0	24.7	25.8	23.1	23.4	24.1	25.2	22.1	22.4	23.1	24.1	20.8	21.1	21.8	22.9	19.6	20.0	20.7	21.7
		S/T	1.00	0.84	0.71	0.6	1.00	0.85	0.72	0.6	1.00	0.87	0.74	0.6	1.00	1.00	0.76	0.6	1.00	1.00	0.78	0.6	1.00	1.00	0.83	0.7
		ΔT	25	23	20	16	25	23	20	16	25	23	20	16	25	23	20	16	24	23	19	16	25	24	20	17
		kW	1.42	1.42	1.42	1.4	1.57	1.57	1.57	1.6	1.74	1.74	1.74	1.7	1.92	1.92	1.92	1.9	2.12	2.12	2.12	2.1	2.35	2.35	2.35	2.4
		Amps	4.7	4.7	4.6	4.7	5.3	5.3	5.3	5.3	6.0	6.0	6.0	6.1	6.8	6.8	6.8	6.8	7.7	7.7	7.7	7.7	8.7	8.7	8.7	8.7
		Hi PR	235	236	238	241.9	272	273	274	278.3	310	311	313	316.5	351	352	354	357.7	395	396	398	402.0	443	444	445	449.4
		Lo PR	127	128	131	136.4	134	136	139	143.8	141	142	145	150.4	146	148	151	155.9	151	153	156	161.3	158	160	163	168.1
85	700	MBh	800.0	24.0	24.7	25.8	23.5	23.8	24.5	25.6	22.9	23.2	23.9	25.0	21.9	22.2	22.9	23.9	20.6	20.9	21.6	22.7	19.4	19.8	20.4	21.5
		S/T	1.00	0.85	0.72	0.6	1.00	0.86	0.73	0.6	1.00	1.00	0.75	0.6	1.00	1.00	0.77	0.6	1.00	1.00	0.79	0.7	1.00	1.00	1.00	0.7
		ΔT	30	28	25	21	30	28	25	21	30	28	25	22	30	28	25	21	29	28	25	21	31	29	26	22
		kW	1.41	1.41	1.41	1.4	1.56	1.56	1.56	1.6	1.73	1.73	1.73	1.7	1.91	1.91	1.91	1.9	2.11	2.11	2.11	2.1	2.34	2.34	2.34	2.4
		Amps	4.6	4.6	4.6	4.7	5.3	5.3	5.2	5.3	6.0	6.0	6.0	6.0	6.8	6.8	6.7	6.8	7.6	7.6	7.6	7.7	8.7	8.7	8.6	8.7
		Hi PR	233	234	235	239.5	269	270	272	275.9	307	308	310	314.1	349	350	351	355.3	393	394	396	399.6	440	441	443	447.0
		Lo PR	125	127	130	134.8	132	134	137	142.3	139	140	144	148.8	145	146	149	154.4	150	151	155	159.8	157	158	161	166.6
	800	MBh	24.0	24.4	25.0	26.1	23.8	24.1	24.8	25.9	23.2	23.5	24.2	25.3	22.2	22.5	23.2	24.2	20.9	21.2	21.9	23.0	19.7	20.1	20.8	21.8
		S/T	1.00	0.91	0.78	0.6	1.00	1.00	0.78	0.6	1.00	1.00	0.81	0.7	1.00	1.00	0.83	0.7	1.00	1.00	0.85	0.7	1.00	1.00	1.00	0.8
		ΔT	29	27	24	20	29	27	24	20	29	27	24	21	29	27	24	20	28	27	23	20	30	28	25	21
		kW	1.42	1.42	1.42	1.43	1.57	1.57	1.57	1.58	1.74	1.74	1.73	1.74	1.92	1.92	1.91	1.92	2.12	2.12	2.11	2.12	2.35	2.35	2.35	2.36
		Amps	4.7	4.6	4.6	4.7	5.3	5.3	5.3	5.3	6.0	6.0	6.0	6.1	6.8	6.8	6.8	6.8	7.7	7.7	7.7	7.7	8.7	8.7	8.7	8.7
		Hi PR	235	236	237	241.4	271	272	274	277.9	309	310	312	316.1	351	352	353	357.2	395	396	398	401.6	442	443	445	448.9
		Lo PR	127	128	131	136.6	134	136	139	144.1	141	142	145	150.6	146	148	151	156.2	152	153	156	161.6	159	160	163	168.4
	880	MBh	24.3	24.6	25.3	26.4	24.1	24.4	25.1	26.2	23.5	23.8	24.5	25.6	22.5	22.8	23.5	24.5	21.2	21.5	22.2	23.3	20.0	20.3	21.0	22.1
		S/T	1.00	0.94	0.81	0.7	1.00	1.00	0.81	0.7	1.00	1.00	0.84	0.7	1.00	1.00	0.86	0.7	1.00	1.00	0.88	0.7	1.00	1.00	1.00	0.8
		ΔT	28	26	23	20	28	26	23	20	28	26	23	20	28	26	23	20	28	26	23	19	29	27	24	20
		kW	1.43	1.43	1.42	1.4	1.58	1.58	1.57	1.6	1.74	1.74	1.74	1.7	1.92	1.92	1.92	1.9	2.12	2.12	2.12	2.1	2.36	2.36	2.35	2.4
		Amps	4.7	4.7	4.7	4.7	5.3	5.3	5.3	5.4	6.0	6.0	6.0	6.1	6.8	6.8	6.8	6.9	7.7	7.7	7.7	7.7	8.7	8.7	8.7	8.7
		Hi PR	236	237	239	243.0	273	274	275	279.4	311	312	314	317.6	352	353	355	358.8	396	397	399	403.1	444	445	446	450.5
		Lo PR	128	130	133	138.2	136	137	140	145.7	142	144	147	152.2	148	149	153	157.7	153	155	158	163.2	160	162	165	169.9

IDB = Entering Indoor Dry Bulb Temperature

High and low pressures are measured at the liquid and suction service valves.

Shaded area is AHRI conditions. Remove (TVA)

kW = Total system power

Amps = outdoor unit amps (comp.+fan)

Expanded Cooling Data — ASXC702410A*+CA*TA2422*4A*+EEP - Low Stage

			Outdoor Ambient Temperature																							
			65ºF				75ºF				85ºF				95ºF				105ºF				115ºF			
			Entering Indoor Wet Bulb Temperature																							
IDB	Airflow		59	63	67	71	59	63	67	71	59	63	67	71	59	63	67	71	59	63	67	71	59	63	67	71
70	500	MBh	16.7	16.9	17.4	-	16.5	16.8	17.3	-	16.1	16.3	16.8	-	15.4	15.6	16.1	-	14.4	14.7	15.2	0.0	13.6	13.8	14.3	-
		S/T	0.60	0.53	0.40	-	0.61	0.54	0.40	-	0.64	0.56	0.43	-	1.00	0.58	0.45	-	1.00	0.60	0.47	0.0	1.00	0.65	0.52	-
		ΔT	18	16	13	-	18	16	13	-	18	17	13	-	18	16	13	-	18	16	13	0	19	17	14	-
		kW	0.89	0.89	0.89	-	0.98	0.98	0.98	-	1.09	1.09	1.08	-	1.20	1.20	1.20	-	1.33	1.32	1.32	0.0	1.47	1.47	1.47	-
		Amps	2.9	2.9	2.9	-	3.3	3.3	3.3	-	3.8	3.8	3.7	-	4.2	4.2	4.2	-	4.8	4.8	4.8	0.0	5.4	5.4	5.4	-
		Hi PR	221	222	224	-	256	257	258	-	292	293	295	-	332	333	334	-	374	375	377	0.0	419	420	422	-
		Lo PR	126	128	131	-	134	135	139	-	141	142	145	-	146	148	151	-	152	153	157	0.0	159	160	164	-
	565	MBh	16.9	17.1	17.6	-	16.7	17.0	17.5	-	16.3	16.5	17.0	-	15.6	15.8	16.3	-	14.6	14.9	15.4	0.0	13.8	14.0	14.5	-
		S/T	0.66	0.58	0.45	-	0.66	0.59	0.45	-	0.69	0.61	0.48	-	1.00	0.63	0.50	-	1.00	0.65	0.52	0.0	1.00	0.71	0.57	-
		ΔT	17	15	12	-	17	15	12	-	17	16	12	-	17	15	12	-	17	15	12	0	18	16	13	-
		kW	0.89	0.89	0.89	-	0.99	0.99	0.98	-	1.09	1.09	1.09	-	1.20	1.20	1.20	-	1.33	1.33	1.33	0.00	1.48	1.48	1.48	-
		Amps	2.9	2.9	2.9	-	3.3	3.3	3.3	-	3.8	3.8	3.8	-	4.3	4.3	4.3	-	4.8	4.8	4.8	0.0	5.5	5.5	5.5	-
		Hi PR	223	224	225	-	258	259	260	-	294	295	297	-	334	334	336	-	376	377	378	0.0	421	422	424	-
		Lo PR	128	129	133	-	136	137	140	-	142	144	147	-	148	149	153	-	153	155	158	0.0	160	162	165	-
	630	MBh	17.1	17.4	17.9	-	17.0	17.2	17.7	-	16.6	16.8	17.3	-	15.8	16.0	16.5	-	14.9	15.1	15.6	0.0	14.1	14.3	14.8	-
		S/T	0.69	0.61	0.48	-	0.70	0.62	0.49	-	1.00	0.64	0.51	-	1.00	0.66	0.53	-	1.00	0.69	0.55	0.0	1.00	1.00	0.60	-
		ΔT	16	15	11	-	16	15	11	-	16	15	12	-	16	15	11	-	16	14	11	0	17	15	12	-
		kW	0.90	0.90	0.89	-	0.99	0.99	0.99	-	1.09	1.09	1.09	-	1.21	1.21	1.21	-	1.33	1.33	1.33	0.0	1.48	1.48	1.48	-
		Amps	2.9	2.9	2.9	-	3.3	3.3	3.3	-	3.8	3.8	3.8	-	4.3	4.3	4.3	-	4.8	4.8	4.8	0.0	5.5	5.5	5.5	-
		Hi PR	224	225	227	-	259	260	262	-	296	297	298	-	335	336	338	-	378	379	380	0.0	423	424	425	-
		Lo PR	130	131	135	-	137	139	142	-	144	146	149	-	150	151	155	-	155	157	160	0.0	162	164	167	-
75	500	MBh	16.7	16.9	17.4	18.2	16.6	16.8	17.3	18.0	16.1	16.4	16.9	17.6	15.4	15.6	16.1	16.9	14.5	14.7	15.2	15.9	13.6	13.9	14.4	15.1
		S/T	0.73	0.66	0.52	0.4	1.00	0.66	0.53	0.4	1.00	0.69	0.55	0.4	1.00	0.71	0.57	0.4	1.00	0.73	0.59	0.5	1.00	1.00	0.65	0.5
		ΔT	22	20	17	14	22	20	17	14	22	20	17	14	22	20	17	14	21	20	17	13	22	21	18	14
		kW	0.89	0.89	0.89	0.9	0.98	0.98	0.98	1.0	1.09	1.09	1.08	1.1	1.20	1.20	1.20	1.2	1.32	1.32	1.32	1.3	1.47	1.47	1.47	1.5
		Amps	2.9	2.9	2.9	2.9	3.3	3.3	3.3	3.3	3.8	3.8	3.7	3.8	4.2	4.2	4.2	4.3	4.8	4.8	4.8	4.8	5.4	5.4	5.4	5.5
		Hi PR	221	222	224	227.6	256	257	259	262.5	293	294	295	299.0	332	333	335	338.4	374	375	377	380.8	420	421	422	426.0
		Lo PR	126	128	131	136.3	134	135	139	144.0	141	142	145	150.7	146	148	151	156.4	152	153	157	161.9	159	160	164	168.9
	565	MBh	16.9	17.1	17.6	18.4	16.8	17.0	17.5	18.3	16.3	16.6	17.1	17.8	15.6	**15.8**	16.3	17.1	14.7	14.9	15.4	16.2	13.8	14.1	14.6	15.3
		S/T	0.79	0.71	0.58	0.4	1.00	0.72	0.58	0.4	1.00	0.74	0.61	0.5	1.00	**0.76**	0.63	0.5	1.00	1.00	0.65	0.5	1.00	1.00	0.70	0.6
		ΔT	21	19	16	13	21	19	16	13	21	19	16	13	21	**19**	16	13	20	19	16	12	22	20	17	13
		kW	0.89	0.89	0.89	0.90	0.99	0.99	0.98	0.99	1.09	1.09	1.09	1.10	1.20	**1.20**	1.20	1.21	1.33	1.33	1.33	1.33	1.48	1.48	1.48	1.48
		Amps	2.9	2.9	2.9	2.9	3.3	3.3	3.3	3.3	3.8	3.8	3.8	3.8	4.3	**4.3**	4.3	4.3	4.8	4.8	4.8	4.8	5.5	5.5	5.4	5.5
		Hi PR	223	224	226	229.4	258	259	260	264.2	294	295	297	300.8	334	**335**	336	340.1	376	377	379	382.5	421	422	424	427.7
		Lo PR	128	129	133	138.0	136	137	140	145.7	142	144	147	152.4	148	**150**	153	158.1	154	155	158	163.7	161	162	165	170.6
	630	MBh	17.1	17.4	17.9	18.6	17.0	17.2	17.7	18.5	16.6	16.8	17.3	18.1	15.8	16.0	16.5	17.3	14.9	15.1	15.6	16.4	14.1	14.3	14.8	15.6
		S/T	0.82	0.74	0.61	0.5	1.00	0.75	0.61	0.5	1.00	0.77	0.64	0.5	1.00	0.79	0.66	0.5	1.00	1.00	0.68	0.5	1.00	1.00	0.73	0.6
		ΔT	20	18	15	12	20	18	15	12	20	18	15	12	20	18	15	12	20	18	15	12	21	19	16	13
		kW	0.90	0.90	0.89	0.9	0.99	0.99	0.99	1.0	1.09	1.09	1.09	1.1	1.21	1.21	1.20	1.2	1.33	1.33	1.33	1.3	1.48	1.48	1.48	1.5
		Amps	2.9	2.9	2.9	3.0	3.3	3.3	3.3	3.4	3.8	3.8	3.8	3.8	4.3	4.3	4.3	4.3	4.8	4.8	4.8	4.9	5.5	5.5	5.5	5.5
		Hi PR	225	226	227	231.0	260	261	262	265.9	296	297	299	302.4	335	336	338	341.8	378	379	380	384.2	423	424	426	429.4
		Lo PR	130	131	135	139.9	137	139	142	147.6	144	146	149	154.3	150	151	155	160.0	155	157	160	165.5	162	164	167	172.5

IDB = Entering Indoor Dry Bulb Temperature

High and low pressures are measured at the liquid and suction service valves.

Shaded area is ACCA (TVA) conditions

kW = Total system power

Amps = outdoor unit amps (comp.+fan)

Expanded Cooling Data — ASXC702410A*+CA*TA2422*4A*+EEP - Low Stage (CONT.)

			Outdoor Ambient Temperature																							
			65ºF				75ºF				85ºF				95ºF				105ºF				115ºF			
			Entering Indoor Wet Bulb Temperature																							
IDB	Airflow		59	63	67	71	59	63	67	71	59	63	67	71	59	63	67	71	59	63	67	71	59	63	67	71
80	500	MBh	16.8	17.0	17.5	18.3	16.6	16.9	17.4	18.1	16.2	16.4	16.9	17.7	15.5	15.7	16.2	17.0	14.5	14.8	15.3	16.0	13.7	13.9	14.4	15.2
		S/T	1.00	0.78	0.65	0.5	1.00	0.79	0.65	0.5	1.00	0.81	0.68	0.5	1.00	1.00	0.70	0.6	1.00	1.00	0.72	0.6	1.00	1.00	0.77	0.6
		ΔT	25	24	21	17	25	24	21	17	26	24	21	18	25	24	21	17	25	23	20	17	26	24	21	18
		kW	0.89	0.89	0.89	0.9	0.98	0.98	0.98	1.0	1.09	1.09	1.08	1.1	1.20	1.20	1.20	1.2	1.33	1.32	1.32	1.3	1.47	1.47	1.47	1.5
		Amps	2.9	2.9	2.9	2.9	3.3	3.3	3.3	3.3	3.8	3.8	3.7	3.8	4.2	4.2	4.2	4.3	4.8	4.8	4.8	4.8	5.4	5.4	5.4	5.5
		Hi PR	222	223	224	228.1	257	258	259	262.9	293	294	296	299.4	332	333	335	338.8	375	376	377	381.2	420	421	423	426.4
		Lo PR	127	128	132	136.9	134	136	139	144.5	141	143	146	151.3	147	148	152	156.9	152	154	157	162.5	159	161	164	169.5
	565	MBh	17.0	17.2	17.7	18.5	16.8	17.1	17.6	18.3	16.4	16.6	17.1	17.9	15.7	15.9	**16.4**	17.2	14.7	15.0	15.5	16.2	13.9	14.1	14.6	15.4
		S/T	1.00	0.83	0.70	0.6	1.00	0.84	0.71	0.6	1.00	0.86	0.73	0.6	1.00	1.00	**0.75**	0.6	1.00	1.00	0.77	0.6	1.00	1.00	0.82	0.7
		ΔT	24	23	20	16	24	23	20	16	25	23	20	17	24	23	**20**	16	24	22	19	16	25	24	20	17
		kW	0.89	0.89	0.89	0.90	0.99	0.99	0.98	0.99	1.09	1.09	1.09	1.10	1.20	1.20	**1.20**	1.21	1.33	1.33	1.33	1.33	1.48	1.48	1.48	1.48
		Amps	2.9	2.9	2.9	2.9	3.3	3.3	3.3	3.3	3.8	3.8	3.8	3.8	4.3	4.3	**4.3**	4.3	4.8	4.8	4.8	4.8	5.5	5.5	5.5	5.5
		Hi PR	223	224	226	229.8	258	259	261	264.6	295	296	297	301.2	334	335	**337**	340.5	377	377	379	382.9	422	423	424	428.1
		Lo PR	128	130	133	138.6	136	138	141	146.3	143	144	148	153.0	149	150	**153**	158.6	154	156	159	164.2	161	163	166	171.2
	630	MBh	17.2	17.5	18.0	18.7	17.1	17.3	17.8	18.6	16.6	16.9	17.4	18.1	15.9	16.1	16.6	17.4	15.0	15.2	15.7	16.5	14.1	14.4	14.9	15.6
		S/T	1.00	0.87	0.73	0.6	1.00	0.87	0.74	0.6	1.00	1.00	0.76	0.6	1.00	1.00	0.78	0.6	1.00	1.00	0.80	0.7	1.00	1.00	1.00	0.7
		ΔT	24	22	19	16	24	22	19	16	24	22	19	16	24	22	19	16	23	22	19	15	24	23	20	16
		kW	0.90	0.90	0.89	0.9	0.99	0.99	0.99	1.0	1.09	1.09	1.09	1.1	1.21	1.21	1.21	1.2	1.33	1.33	1.33	1.3	1.48	1.48	1.48	1.5
		Amps	2.9	2.9	2.9	3.0	3.3	3.3	3.3	3.4	3.8	3.8	3.8	3.8	4.3	4.3	4.3	4.3	4.8	4.8	4.8	4.9	5.5	5.5	5.5	5.5
		Hi PR	225	226	228	231.5	260	261	262	266.3	296	297	299	302.8	336	337	338	342.2	378	379	381	384.6	423	424	426	429.8
		Lo PR	130	132	135	140.5	138	140	143	148.1	145	146	149	154.8	150	152	155	160.5	156	158	161	166.1	163	164	168	173.1
85	500	MBh	17.1	17.3	17.8	18.6	16.9	17.2	17.7	18.4	16.5	16.7	17.2	18.0	15.7	16.0	16.5	17.2	14.8	15.1	15.6	16.3	14.0	14.2	14.7	15.5
		S/T	1.00	0.88	0.75	0.6	1.00	1.00	0.75	0.6	1.00	1.00	0.78	0.6	1.00	1.00	0.80	0.7	1.00	1.00	1.00	0.7	1.00	1.00	1.00	0.7
		ΔT	29	27	24	21	29	27	24	21	29	27	24	21	29	27	24	21	28	27	24	20	29	28	25	21
		kW	0.89	0.89	0.89	0.9	0.98	0.98	0.98	1.0	1.09	1.09	1.09	1.1	1.20	1.20	1.20	1.2	1.33	1.33	1.32	1.3	1.48	1.47	1.47	1.5
		Amps	2.9	2.9	2.9	2.9	3.3	3.3	3.3	3.3	3.8	3.8	3.8	3.8	4.3	4.3	4.2	4.3	4.8	4.8	4.8	4.8	5.4	5.4	5.4	5.5
		Hi PR	223	224	225	229.1	258	259	260	264.0	294	295	297	300.5	333	334	336	339.8	376	377	378	382.2	421	422	424	427.5
		Lo PR	129	130	133	138.8	136	138	141	146.4	143	145	148	153.1	149	150	153	158.8	154	156	159	164.4	161	163	166	171.4
	565	MBh	17.3	17.5	18.0	18.8	17.1	17.4	17.9	18.6	16.7	16.9	17.4	18.2	15.9	16.2	16.7	17.4	15.0	15.3	15.8	16.5	14.2	14.4	14.9	15.7
		S/T	1.00	0.93	0.80	0.7	1.00	1.00	0.81	0.7	1.00	1.00	0.83	0.7	1.00	1.00	0.85	0.7	1.00	1.00	1.00	0.7	1.00	1.00	1.00	0.8
		ΔT	28	26	23	20	28	26	23	20	28	26	23	20	28	26	23	20	27	26	23	19	28	27	24	20
		kW	0.89	0.89	0.89	0.90	0.99	0.99	0.99	0.99	1.09	1.09	1.09	1.10	1.21	1.20	1.20	1.21	1.33	1.33	1.33	1.34	1.48	1.48	1.48	1.48
		Amps	2.9	2.9	2.9	2.9	3.3	3.3	3.3	3.4	3.8	3.8	3.8	3.8	4.3	4.3	4.3	4.3	4.8	4.8	4.8	4.8	5.5	5.5	5.5	5.5
		Hi PR	224	225	227	230.8	259	260	262	265.7	296	297	298	302.2	335	336	338	341.5	378	379	380	383.9	423	424	425	429.2
		Lo PR	130	132	135	140.5	138	140	143	148.1	145	146	149	154.9	150	152	155	160.5	156	158	161	166.1	163	165	168	173.1
	630	MBh	17.5	17.8	18.2	19.0	17.4	17.6	18.1	18.9	16.9	17.2	17.7	18.4	16.2	16.4	16.9	17.7	15.3	15.5	16.0	16.8	14.4	14.7	15.2	15.9
		S/T	1.00	0.97	0.83	0.7	1.00	1.00	0.84	0.7	1.00	1.00	0.86	0.7	1.00	1.00	0.88	0.7	1.00	1.00	1.00	0.8	1.00	1.00	1.00	0.8
		ΔT	27	25	22	19	27	25	22	19	27	25	22	19	27	25	22	19	27	25	22	19	28	26	23	20
		kW	0.90	0.90	0.90	0.9	0.99	0.99	0.99	1.0	1.10	1.10	1.09	1.1	1.21	1.21	1.21	1.2	1.34	1.33	1.33	1.3	1.48	1.48	1.48	1.5
		Amps	2.9	2.9	2.9	3.0	3.3	3.3	3.3	3.4	3.8	3.8	3.8	3.8	4.3	4.3	4.3	4.3	4.8	4.8	4.8	4.9	5.5	5.5	5.5	5.5
		Hi PR	226	227	229	232.5	261	262	264	267.4	298	298	300	303.9	337	338	339	343.2	379	380	382	385.6	424	425	427	430.9
		Lo PR	132	134	137	142.4	140	141	145	150.0	147	148	151	156.7	152	154	157	162.4	158	159	163	168.0	165	166	170	175.0

IDB = Entering Indoor Dry Bulb Temperature

High and low pressures are measured at the liquid and suction service valves.

Shaded area is AHRI conditions. Remove (TVA)

kW = Total system power

Amps = outdoor unit amps (comp.+fan)

Expanded Cooling Data — ASXC703610A*+CA*TA3626*4A*+EEP - High Stage

			Outdoor Ambient Temperature																							
			65ºF				75ºF				85ºF				95ºF				105ºF				115ºF			
			Entering Indoor Wet Bulb Temperature																							
IDB	Airflow		59	63	67	71	59	63	67	71	59	63	67	71	59	63	67	71	59	63	67	71	59	63	67	71
70	1050	MBh	34.8	35.3	36.3	-	34.5	35.0	36.0	-	33.6	34.1	35.1	-	32.0	32.5	33.5	-	30.1	30.6	31.6	-	28.4	28.8	29.9	-
		S/T	0.61	0.53	0.39	-	0.61	0.54	0.40	-	0.64	0.56	0.43	-	0.66	0.58	0.45	-	1.00	0.60	0.47	-	1.00	0.65	0.52	-
		ΔT	20	18	15	-	20	18	15	-	20	18	15	-	20	18	15	-	20	18	14	-	21	19	16	-
		kW	2.07	2.06	2.06	-	2.29	2.29	2.29	-	2.55	2.54	2.54	-	2.82	2.82	2.82	-	3.13	3.13	3.12	-	3.49	3.49	3.48	-
		Amps	6.7	6.7	6.7	-	7.7	7.7	7.6	-	8.8	8.8	8.7	-	10.0	10.0	9.9	-	11.3	11.3	11.3	-	12.9	12.9	12.8	-
		Hi PR	244	245	247	-	283	284	286	-	323	324	326	-	367	368	370	-	414	415	416	-	464	465	467	-
		Lo PR	122	124	127	-	130	131	134	-	136	138	141	-	142	143	146	-	147	149	152	-	154	155	159	-
	1200	MBh	35.3	35.7	36.8	-	34.9	35.4	36.5	-	34.0	34.5	35.6	-	32.5	33.0	34.0	-	30.6	31.0	32.1	-	28.8	29.3	30.3	-
		S/T	0.67	0.59	0.45	-	0.67	0.60	0.46	-	0.70	0.62	0.49	-	1.00	0.64	0.51	-	1.00	0.66	0.53	-	1.00	0.71	0.58	-
		ΔT	19	17	14	-	19	17	14	-	19	17	14	-	19	17	14	-	19	17	13	-	20	18	14	-
		kW	2.08	2.08	2.07	-	2.30	2.30	2.30	-	2.56	2.56	2.55	-	2.83	2.83	2.83	-	3.14	3.14	3.13	-	3.50	3.50	3.49	-
		Amps	6.7	6.7	6.7	-	7.7	7.7	7.7	-	8.8	8.8	8.8	-	10.0	10.0	10.0	-	11.4	11.3	11.3	-	12.9	12.9	12.9	-
		Hi PR	246	247	249	-	285	286	288	-	325	326	328	-	369	370	372	-	416	417	419	-	466	467	469	-
		Lo PR	124	126	129	-	132	133	136	-	138	140	143	-	144	145	148	-	149	151	154	-	156	157	160	-
	1350	MBh	35.8	36.3	37.3	-	35.5	36.0	37.0	-	34.6	35.1	36.1	-	33.0	33.5	34.5	-	31.1	31.6	32.6	-	29.4	29.9	30.9	-
		S/T	0.70	0.62	0.49	-	0.71	0.63	0.49	-	0.73	0.66	0.52	-	1.00	0.68	0.54	-	1.00	0.70	0.56	-	1.00	0.75	0.61	-
		ΔT	18	16	13	-	18	16	13	-	18	16	13	-	18	16	13	-	18	16	12	-	19	17	14	-
		kW	2.09	2.09	2.08	-	2.31	2.31	2.31	-	2.57	2.57	2.56	-	2.84	2.84	2.84	-	3.15	3.15	3.14	-	3.51	3.51	3.50	-
		Amps	6.8	6.8	6.7	-	7.8	7.8	7.7	-	8.9	8.9	8.8	-	10.1	10.1	10.0	-	11.4	11.4	11.4	-	13.0	13.0	12.9	-
		Hi PR	248	249	251	-	287	288	290	-	327	328	330	-	371	372	374	-	418	419	421	-	468	469	471	-
		Lo PR	126	128	131	-	134	135	138	-	140	142	145	-	146	147	150	-	151	153	156	-	158	159	162	-
75	1050	MBh	34.8	35.3	36.3	37.9	34.5	35.0	36.0	37.6	33.6	34.1	35.1	36.7	32.0	32.5	33.6	35.2	30.1	30.6	31.7	33.2	28.4	28.9	29.9	31.5
		S/T	0.74	0.66	0.52	0.4	0.74	0.67	0.53	0.4	1.00	0.69	0.56	0.4	1.00	0.71	0.57	0.4	1.00	0.73	0.60	0.5	1.00	1.00	0.65	0.5
		ΔT	24	22	19	15	24	22	19	15	24	23	19	15	24	22	19	15	24	22	19	15	25	23	20	16
		kW	2.06	2.06	2.06	2.1	2.29	2.29	2.29	2.3	2.55	2.54	2.54	2.6	2.82	2.82	2.81	2.8	3.13	3.13	3.12	3.1	3.49	3.49	3.48	3.5
		Amps	6.7	6.7	6.6	6.7	7.7	7.7	7.6	7.7	8.8	8.8	8.7	8.8	10.0	10.0	9.9	10.0	11.3	11.3	11.3	11.3	12.9	12.9	12.8	12.9
		Hi PR	245	246	247	251.6	283	284	286	290.2	324	325	326	330.6	367	368	370	374.1	414	415	417	420.9	464	465	467	471.0
		Lo PR	122	124	127	132.2	130	131	134	139.6	136	138	141	146.1	142	143	146	151.7	147	149	152	157.1	154	156	159	163.8
	1200	MBh	35.3	35.8	36.8	38.4	35.0	35.5	36.5	38.1	34.1	34.5	35.6	37.2	32.5	**33.0**	34.0	35.6	30.6	31.1	32.1	33.7	28.8	29.3	30.4	32.0
		S/T	0.80	0.72	0.58	0.4	0.80	0.73	0.59	0.4	1.00	0.75	0.62	0.5	1.00	**0.77**	0.63	0.5	1.00	0.79	0.66	0.5	1.00	1.00	0.71	0.6
		ΔT	23	21	18	14	23	21	18	14	23	21	18	14	23	**21**	18	14	23	21	17	14	24	22	19	15
		kW	2.08	2.07	2.07	2.09	2.30	2.30	2.30	2.31	2.56	2.56	2.55	2.57	2.83	**2.83**	2.83	2.84	3.14	3.14	3.13	3.15	3.50	3.50	3.49	3.51
		Amps	6.7	6.7	6.7	6.8	7.7	7.7	7.7	7.8	8.8	8.8	8.8	8.9	10.0	**10.0**	10.0	10.1	11.3	11.3	11.3	11.4	12.9	12.9	12.9	13.0
		Hi PR	247	248	249	253.7	285	286	288	292.2	326	327	328	332.6	369	**370**	372	376.1	416	417	419	423.0	466	467	469	473.1
		Lo PR	124	126	129	134.0	132	133	136	141.4	138	140	143	147.9	144	**145**	148	153.5	149	151	154	158.9	156	157	160	165.6
	1350	MBh	35.8	36.3	37.4	38.9	35.5	36.0	37.0	38.6	34.6	35.1	36.1	37.7	33.0	33.5	34.6	36.2	31.1	31.6	32.7	34.2	29.4	29.9	30.9	32.5
		S/T	0.83	0.75	0.62	0.5	1.00	0.76	0.62	0.5	1.00	0.78	0.65	0.5	1.00	0.80	0.67	0.5	1.00	0.83	0.69	0.5	1.00	1.00	0.74	0.6
		ΔT	22	20	17	13	22	20	17	13	22	20	17	13	22	20	17	13	22	20	16	13	23	21	18	14
		kW	2.09	2.08	2.08	2.1	2.31	2.31	2.31	2.3	2.57	2.57	2.56	2.6	2.84	2.84	2.84	2.9	3.15	3.15	3.14	3.2	3.51	3.51	3.50	3.5
		Amps	6.8	6.8	6.7	6.8	7.8	7.7	7.7	7.8	8.9	8.8	8.8	8.9	10.1	10.0	10.0	10.1	11.4	11.4	11.4	11.4	13.0	12.9	12.9	13.0
		Hi PR	249	250	251	255.7	287	288	290	294.3	328	329	330	334.6	371	372	374	378.1	418	419	421	425.0	468	469	471	475.1
		Lo PR	126	128	131	136.0	134	135	138	143.4	140	142	145	149.9	146	147	150	155.4	151	153	156	160.9	158	159	162	167.6

IDB = Entering Indoor Dry Bulb Temperature

High and low pressures are measured at the liquid and suction service valves.

Shaded area is ACCA (TVA) conditions

kW = Total system power

Amps = outdoor unit amps (comp.+fan)

Expanded Cooling Data — ASXC703610A*+CA*TA3626*4A*+EEP - High Stage (cont.)

			Outdoor Ambient Temperature																							
			65ºF				75ºF				85ºF				95ºF				105ºF				115ºF			
			Entering Indoor Wet Bulb Temperature																							
IDB	Airflow		59	63	67	71	59	63	67	71	59	63	67	71	59	63	67	71	59	63	67	71	59	63	67	71
80	1050	MBh	35.0	35.5	36.5	38.1	34.7	35.2	36.2	37.8	33.8	34.3	35.3	36.9	32.2	32.7	33.7	35.3	30.3	30.8	31.8	33.4	28.6	29.0	30.1	31.7
		S/T	1.00	0.79	0.65	0.5	1.00	0.79	0.66	0.5	1.00	0.82	0.68	0.5	1.00	0.84	0.70	0.6	1.00	1.00	0.72	0.6	1.00	1.00	0.77	0.6
		ΔT	28	26	23	19	28	26	23	19	28	27	23	20	28	26	23	19	28	26	23	19	29	27	24	20
		kW	2.07	2.06	2.06	2.1	2.29	2.29	2.29	2.3	2.55	2.54	2.54	2.6	2.82	2.82	2.82	2.8	3.13	3.13	3.12	3.1	3.49	3.49	3.48	3.5
		Amps	6.7	6.7	6.7	6.7	7.7	7.7	7.6	7.7	8.8	8.8	8.7	8.8	10.0	10.0	9.9	10.0	11.3	11.3	11.3	11.3	12.9	12.9	12.8	12.9
		Hi PR	245	246	248	252.1	284	285	286	290.6	324	325	327	331.0	367	369	370	374.5	414	415	417	421.4	464	465	467	471.4
		Lo PR	123	124	128	132.7	130	132	135	140.2	137	138	141	146.7	142	144	147	152.2	148	149	152	157.6	155	156	159	164.4
	1200	MBh	35.5	35.9	37.0	38.6	35.1	35.6	36.7	38.3	34.2	34.7	35.8	37.4	32.7	33.2	**34.2**	35.8	30.8	31.2	32.3	33.9	29.0	29.5	30.5	32.1
		S/T	1.00	0.85	0.71	0.6	1.00	0.85	0.72	0.6	1.00	0.88	0.74	0.6	1.00	1.00	**0.76**	0.6	1.00	1.00	0.78	0.6	1.00	1.00	0.83	0.7
		ΔT	27	25	22	18	27	25	22	18	27	26	22	18	27	25	**22**	18	27	25	22	18	28	26	23	19
		kW	2.08	2.08	2.07	2.09	2.30	2.30	2.30	2.32	2.56	2.56	2.55	2.57	2.83	2.83	**2.83**	2.84	3.14	3.14	3.13	3.15	3.50	3.50	3.49	3.51
		Amps	6.7	6.7	6.7	6.8	7.7	7.7	7.7	7.8	8.8	8.8	8.8	8.9	10.0	10.0	**10.0**	10.1	11.3	11.3	11.3	11.4	12.9	12.9	12.9	13.0
		Hi PR	247	248	250	254.1	286	287	288	292.7	326	327	329	333.1	370	371	**372**	376.6	416	417	419	423.5	466	468	469	473.5
		Lo PR	125	126	129	134.5	132	134	137	142.0	139	140	143	148.5	144	146	**149**	154.0	150	151	154	159.4	156	158	161	166.2
	1350	MBh	36.0	36.5	37.5	39.1	35.7	36.2	37.2	38.8	34.8	35.3	36.3	37.9	33.2	33.7	34.7	36.3	31.3	31.8	32.8	34.4	29.6	30.1	31.1	32.7
		S/T	1.00	0.88	0.74	0.6	1.00	0.89	0.75	0.6	1.00	0.91	0.77	0.6	1.00	1.00	0.79	0.7	1.00	1.00	0.82	0.7	1.00	1.00	0.87	0.7
		ΔT	26	24	21	17	26	24	21	17	26	25	21	18	26	24	21	17	26	24	21	17	27	25	22	18
		kW	2.09	2.08	2.08	2.1	2.31	2.31	2.31	2.3	2.57	2.57	2.56	2.6	2.84	2.84	2.84	2.9	3.15	3.15	3.14	3.2	3.51	3.51	3.50	3.5
		Amps	6.8	6.8	6.7	6.8	7.8	7.8	7.7	7.8	8.9	8.9	8.8	8.9	10.1	10.0	10.0	10.1	11.4	11.4	11.4	11.4	13.0	13.0	12.9	13.0
		Hi PR	249	250	252	256.1	288	289	290	294.7	328	329	331	335.1	372	373	374	378.6	418	420	421	425.5	468	470	471	475.5
		Lo PR	127	128	131	136.5	134	136	139	144.0	141	142	145	150.5	146	148	151	156.0	152	153	156	161.4	158	160	163	168.2
85	1050	MBh	35.6	36.1	37.1	38.7	35.3	35.8	36.8	38.4	34.4	34.9	35.9	37.5	32.8	33.3	34.3	35.9	30.9	31.4	32.4	34.0	29.1	29.6	30.7	32.3
		S/T	1.00	0.89	0.75	0.6	1.00	0.89	0.76	0.6	1.00	1.00	0.78	0.6	1.00	1.00	0.80	0.7	1.00	1.00	0.82	0.7	1.00	1.00	1.00	0.7
		ΔT	32	30	27	23	32	30	27	23	32	30	27	23	32	30	27	23	32	30	26	23	33	31	27	24
		kW	2.07	2.07	2.06	2.1	2.30	2.30	2.29	2.3	2.55	2.55	2.55	2.6	2.83	2.82	2.82	2.8	3.13	3.13	3.13	3.1	3.49	3.49	3.49	3.5
		Amps	6.7	6.7	6.7	6.7	7.7	7.7	7.7	7.7	8.8	8.8	8.8	8.8	10.0	10.0	10.0	10.0	11.3	11.3	11.3	11.4	12.9	12.9	12.9	12.9
		Hi PR	246	247	249	253.2	285	286	288	291.8	325	326	328	332.2	369	370	371	375.7	416	417	418	422.5	466	467	468	472.6
		Lo PR	125	126	129	134.6	132	134	137	142.0	139	140	143	148.5	144	146	149	154.0	150	151	154	159.4	156	158	161	166.2
	1200	MBh	36.0	36.5	37.6	39.2	35.7	36.2	37.3	38.8	34.8	35.3	36.3	37.9	33.3	33.7	34.8	36.4	31.3	31.8	32.9	34.5	29.6	30.1	31.1	32.7
		S/T	1.00	0.95	0.81	0.7	1.00	0.95	0.82	0.7	1.00	1.00	0.84	0.7	1.00	1.00	0.86	0.7	1.00	1.00	0.88	0.7	1.00	1.00	1.00	0.8
		ΔT	31	29	25	22	31	29	25	22	31	29	26	22	31	29	25	22	30	29	25	22	32	30	26	23
		kW	2.08	2.08	2.08	2.09	2.31	2.31	2.30	2.32	2.56	2.56	2.56	2.57	2.84	2.84	2.83	2.85	3.14	3.14	3.14	3.16	3.50	3.50	3.50	3.52
		Amps	6.7	6.7	6.7	6.8	7.7	7.7	7.7	7.8	8.8	8.8	8.8	8.9	10.0	10.0	10.0	10.1	11.4	11.4	11.3	11.4	12.9	12.9	12.9	13.0
		Hi PR	248	249	251	255.3	287	288	290	293.8	327	328	330	334.2	371	372	373	377.7	418	419	420	424.6	468	469	470	474.7
		Lo PR	127	128	131	136.4	134	135	139	143.8	140	142	145	150.3	146	148	151	155.8	151	153	156	161.2	158	160	163	168.0
	1350	MBh	36.6	37.1	38.1	39.7	36.3	36.8	37.8	39.4	35.4	35.9	36.9	38.5	33.8	34.3	35.3	36.9	31.9	32.4	33.4	35.0	30.1	30.6	31.7	33.3
		S/T	1.00	0.98	0.84	0.7	1.00	1.00	0.85	0.7	1.00	1.00	0.88	0.7	1.00	1.00	0.90	0.8	1.00	1.00	0.92	0.8	1.00	1.00	1.00	0.8
		ΔT	30	28	25	21	30	28	24	21	30	28	25	21	30	28	24	21	30	28	24	21	31	29	25	22
		kW	2.09	2.09	2.09	2.1	2.32	2.32	2.31	2.3	2.57	2.57	2.57	2.6	2.85	2.85	2.84	2.9	3.15	3.15	3.15	3.2	3.51	3.51	3.51	3.5
		Amps	6.8	6.8	6.8	6.8	7.8	7.8	7.8	7.8	8.9	8.9	8.9	8.9	10.1	10.1	10.1	10.1	11.4	11.4	11.4	11.5	13.0	13.0	13.0	13.0
		Hi PR	250	251	253	257.3	289	290	292	295.9	329	330	332	336.2	373	374	375	379.7	420	421	422	426.6	470	471	472	476.7
		Lo PR	129	130	133	138.4	136	137	141	145.8	142	144	147	152.3	148	150	153	157.8	153	155	158	163.2	160	162	165	170.0

IDB = Entering Indoor Dry Bulb Temperature

High and low pressures are measured at the liquid and suction service valves.

Shaded area is AHRI conditions. Remove (TVA)

kW = Total system power

Amps = outdoor unit amps (comp.+fan)

Expanded Cooling Data — ASXC703610A*+CA*TA3626*4A*+EEP - Low Stage

			Outdoor Ambient Temperature																							
			65ºF				75ºF				85ºF				95ºF				105ºF				115ºF			
			Entering Indoor Wet Bulb Temperature																							
IDB	Airflow		59	63	67	71	59	63	67	71	59	63	67	71	59	63	67	71	59	63	67	71	59	63	67	71
70	680	MBh	25.0	25.4	26.1	-	24.8	25.1	25.9	-	24.1	24.5	25.2	-	23.0	23.4	24.1	-	21.6	22.0	22.7	0.0	20.4	20.7	21.5	-
		S/T	0.62	0.54	0.40	-	0.63	0.55	0.41	-	0.65	0.57	0.44	-	1.00	0.59	0.46	-	1.00	0.62	0.48	0.0	1.00	0.67	0.53	-
		ΔT	19	18	14	-	19	18	14	-	20	18	14	-	19	18	14	-	19	17	14	0	20	18	15	-
		kW	1.30	1.30	1.30	-	1.44	1.44	1.44	-	1.60	1.60	1.60	-	1.77	1.77	1.77	-	1.97	1.97	1.96	0.0	2.19	2.19	2.19	-
		Amps	4.2	4.2	4.2	-	4.8	4.8	4.8	-	5.5	5.5	5.5	-	6.3	6.3	6.3	-	7.1	7.1	7.1	0.0	8.1	8.1	8.1	-
		Hi PR	234	235	236	-	270	271	273	-	309	310	312	-	351	352	353	-	395	396	398	0.0	443	444	446	-
		Lo PR	126	127	130	-	133	135	138	-	140	142	145	-	146	147	150	-	151	153	156	0.0	158	160	163	-
	780	MBh	25.3	25.7	26.4	-	25.1	25.5	26.2	-	24.5	24.8	25.6	-	23.3	23.7	24.4	-	22.0	22.3	23.1	0.0	20.7	21.1	21.8	-
		S/T	0.68	0.61	0.47	-	0.69	0.61	0.47	-	0.72	0.64	0.50	-	1.00	0.66	0.52	-	1.00	0.68	0.54	0.0	1.00	0.73	0.59	-
		ΔT	18	17	13	-	18	16	13	-	19	17	13	-	18	16	13	-	18	16	13	0	19	17	14	-
		kW	1.31	1.31	1.30	-	1.45	1.45	1.45	-	1.61	1.61	1.61	-	1.78	1.78	1.78	-	1.98	1.97	1.97	0.00	2.20	2.20	2.20	-
		Amps	4.2	4.2	4.2	-	4.9	4.8	4.8	-	5.5	5.5	5.5	-	6.3	6.3	6.3	-	7.1	7.1	7.1	0.0	8.1	8.1	8.1	-
		Hi PR	236	237	238	-	272	273	275	-	311	312	314	-	353	354	355	-	397	398	400	0.0	445	446	448	-
		Lo PR	128	129	132	-	135	137	140	-	142	144	147	-	148	149	152	-	153	155	158	0.0	160	162	165	-
	910	MBh	25.9	26.2	27.0	-	25.7	26.0	26.8	-	25.0	25.4	26.1	-	23.9	24.2	25.0	-	22.5	22.9	23.6	0.0	21.3	21.6	22.4	-
		S/T	0.73	0.65	0.51	-	0.73	0.65	0.51	-	1.00	0.68	0.54	-	1.00	0.70	0.56	-	1.00	0.72	0.58	0.0	1.00	1.00	0.64	-
		ΔT	17	15	12	-	17	15	12	-	17	16	12	-	17	15	12	-	17	15	12	0	18	16	13	-
		kW	1.31	1.31	1.31	-	1.46	1.46	1.45	-	1.62	1.62	1.61	-	1.79	1.79	1.79	-	1.98	1.98	1.98	0.0	2.21	2.21	2.21	-
		Amps	4.3	4.3	4.3	-	4.9	4.9	4.9	-	5.6	5.6	5.6	-	6.3	6.3	6.3	-	7.2	7.2	7.2	0.0	8.2	8.2	8.1	-
		Hi PR	238	239	241	-	275	276	278	-	314	315	316	-	355	356	358	-	400	401	403	0.0	448	449	451	-
		Lo PR	130	132	135	-	138	140	143	-	145	146	149	-	150	152	155	-	156	158	161	0.0	163	164	168	-
75	680	MBh	25.0	25.4	26.1	27.3	24.8	25.2	25.9	27.0	24.1	24.5	25.2	26.4	23.0	23.4	24.1	25.3	21.6	22.0	22.8	23.9	20.4	20.7	21.5	22.6
		S/T	0.75	0.68	0.54	0.4	1.00	0.68	0.54	0.4	1.00	0.71	0.57	0.4	1.00	0.73	0.59	0.4	1.00	0.75	0.61	0.5	1.00	1.00	0.66	0.5
		ΔT	23	22	18	15	23	22	18	15	24	22	18	15	23	21	18	15	23	21	18	14	24	22	19	16
		kW	1.30	1.30	1.29	1.3	1.44	1.44	1.44	1.4	1.60	1.60	1.60	1.6	1.77	1.77	1.77	1.8	1.97	1.97	1.96	2.0	2.19	2.19	2.19	2.2
		Amps	4.2	4.2	4.2	4.2	4.8	4.8	4.8	4.8	5.5	5.5	5.5	5.5	6.3	6.3	6.2	6.3	7.1	7.1	7.1	7.1	8.1	8.1	8.1	8.1
		Hi PR	234	235	236	240.5	271	272	273	277.3	309	310	312	316.0	351	352	353	357.5	396	397	398	402.4	443	445	446	450.2
		Lo PR	126	127	130	135.8	133	135	138	143.5	140	142	145	150.2	146	147	151	155.9	151	153	156	161.4	158	160	163	168.4
	780	MBh	25.4	25.7	26.5	27.6	25.1	25.5	26.2	27.4	24.5	24.8	25.6	26.7	23.4	**23.7**	24.5	25.6	22.0	22.3	23.1	24.2	20.7	21.1	21.8	23.0
		S/T	0.82	0.74	0.60	0.5	1.00	0.75	0.61	0.5	1.00	0.77	0.63	0.5	1.00	**0.79**	0.65	0.5	1.00	1.00	0.67	0.5	1.00	1.00	0.73	0.6
		ΔT	22	20	17	14	22	20	17	14	22	21	17	14	22	**20**	17	14	22	20	17	13	23	21	18	14
		kW	1.31	1.30	1.30	1.31	1.45	1.45	1.45	1.46	1.61	1.61	1.60	1.62	1.78	**1.78**	1.78	1.79	1.97	1.97	1.97	1.98	2.20	2.20	2.20	2.21
		Amps	4.2	4.2	4.2	4.3	4.8	4.8	4.8	4.9	5.5	5.5	5.5	5.6	6.3	**6.3**	6.3	6.3	7.1	7.1	7.1	7.2	8.1	8.1	8.1	8.2
		Hi PR	236	237	238	242.5	273	274	275	279.4	311	312	314	318.0	353	**354**	356	359.6	398	399	400	404.4	446	447	448	452.3
		Lo PR	128	129	132	137.7	135	137	140	145.4	142	144	147	152.1	148	**149**	152	157.8	153	155	158	163.3	160	162	165	170.3
	910	MBh	25.9	26.3	27.0	28.1	25.7	26.0	26.8	27.9	25.0	25.4	26.1	27.3	23.9	24.3	25.0	26.1	22.5	22.9	23.6	24.8	21.3	21.6	22.4	23.5
		S/T	0.86	0.78	0.64	0.5	1.00	0.79	0.65	0.5	1.00	0.81	0.67	0.5	1.00	0.83	0.69	0.5	1.00	1.00	0.72	0.6	1.00	1.00	0.77	0.6
		ΔT	21	19	16	12	21	19	16	12	21	19	16	13	21	19	16	12	21	19	16	12	22	20	17	13
		kW	1.31	1.31	1.31	1.3	1.46	1.46	1.45	1.5	1.62	1.62	1.61	1.6	1.79	1.79	1.79	1.8	1.98	1.98	1.98	2.0	2.21	2.21	2.21	2.2
		Amps	4.3	4.3	4.2	4.3	4.9	4.9	4.9	4.9	5.6	5.6	5.6	5.6	6.3	6.3	6.3	6.4	7.2	7.2	7.2	7.2	8.2	8.2	8.1	8.2
		Hi PR	238	239	241	245.1	275	276	278	282.0	314	315	316	320.6	355	356	358	362.2	400	401	403	407.0	448	449	451	454.8
		Lo PR	130	132	135	140.5	138	140	143	148.2	145	146	150	154.9	150	152	155	160.5	156	158	161	166.1	163	165	168	173.1

IDB = Entering Indoor Dry Bulb Temperature

High and low pressures are measured at the liquid and suction service valves.

Shaded area is ACCA (TVA) conditions

kW = Total system power

Amps = outdoor unit amps (comp.+fan)

Expanded Cooling Data — ASXC703610A*+CA*TA3626*4A*+EEP - Low Stage (cont.)

			Outdoor Ambient Temperature																							
			65ºF				75ºF				85ºF				95ºF				105ºF				115ºF			
			Entering Indoor Wet Bulb Temperature																							
IDB	Airflow		59	63	67	71	59	63	67	71	59	63	67	71	59	63	67	71	59	63	67	71	59	63	67	71
80	680	MBh	25.2	25.5	26.3	27.4	24.9	25.3	26.0	27.2	24.3	24.6	25.4	26.5	23.2	23.5	24.3	25.4	21.8	22.1	22.9	24.0	20.5	20.9	21.6	22.8
		S/T	1.00	0.80	0.66	0.5	1.00	0.81	0.67	0.5	1.00	0.84	0.70	0.6	1.00	1.00	0.72	0.6	1.00	1.00	0.74	0.6	1.00	1.00	0.79	0.6
		ΔT	27	26	22	19	27	25	22	19	28	26	22	19	27	25	22	19	27	25	22	18	28	26	23	20
		kW	1.30	1.30	1.30	1.3	1.44	1.44	1.44	1.4	1.60	1.60	1.60	1.6	1.77	1.77	1.77	1.8	1.97	1.97	1.96	2.0	2.19	2.19	2.19	2.2
		Amps	4.2	4.2	4.2	4.2	4.8	4.8	4.8	4.9	5.5	5.5	5.5	5.5	6.3	6.3	6.3	6.3	7.1	7.1	7.1	7.1	8.1	8.1	8.1	8.1
		Hi PR	234	235	237	240.9	271	272	274	277.8	310	311	312	316.4	351	352	354	358.0	396	397	399	402.8	444	445	447	450.6
		Lo PR	126	128	131	136.4	134	135	139	144.0	141	142	145	150.7	146	148	151	156.4	152	153	157	162.0	159	160	164	168.9
	780	MBh	25.5	25.8	26.6	27.7	25.3	25.6	26.4	27.5	24.6	25.0	25.7	26.9	23.5	23.8	**24.6**	25.7	22.1	22.5	23.2	24.4	20.9	21.2	22.0	23.1
		S/T	1.00	0.87	0.73	0.6	1.00	0.87	0.74	0.6	1.00	0.90	0.76	0.6	1.00	1.00	**0.78**	0.6	1.00	1.00	0.80	0.7	1.00	1.00	0.86	0.7
		ΔT	26	24	21	18	26	24	21	18	26	25	21	18	26	24	**21**	18	26	24	21	17	27	25	22	18
		kW	1.31	1.31	1.30	1.31	1.45	1.45	1.45	1.46	1.61	1.61	1.61	1.62	1.78	1.78	**1.78**	1.79	1.98	1.97	1.97	1.98	2.20	2.20	2.20	2.21
		Amps	4.2	4.2	4.2	4.3	4.9	4.8	4.8	4.9	5.5	5.5	5.5	5.6	6.3	6.3	**6.3**	6.3	7.1	7.1	7.1	7.2	8.1	8.1	8.1	8.2
		Hi PR	236	237	239	242.9	273	274	276	279.8	312	313	314	318.4	353	354	**356**	360.0	398	399	401	404.8	446	447	449	452.7
		Lo PR	128	130	133	138.3	136	137	141	145.9	143	144	147	152.6	148	150	**153**	158.3	154	155	159	163.9	161	162	165	170.8
	910	MBh	26.0	26.4	27.1	28.3	25.8	26.2	26.9	28.1	25.2	25.5	26.3	27.4	24.0	24.4	25.1	26.3	22.7	23.0	23.8	24.9	21.4	21.8	22.5	23.6
		S/T	1.00	0.91	0.77	0.6	1.00	0.92	0.78	0.6	1.00	1.00	0.80	0.7	1.00	1.00	0.82	0.7	1.00	1.00	0.84	0.7	1.00	1.00	1.00	0.8
		ΔT	25	23	20	16	25	23	20	16	25	23	20	17	25	23	20	16	25	23	20	16	26	24	21	17
		kW	1.31	1.31	1.31	1.3	1.46	1.46	1.45	1.5	1.62	1.62	1.61	1.6	1.79	1.79	1.79	1.8	1.98	1.98	1.98	2.0	2.21	2.21	2.21	2.2
		Amps	4.3	4.3	4.3	4.3	4.9	4.9	4.9	4.9	5.6	5.6	5.6	5.6	6.3	6.3	6.3	6.4	7.2	7.2	7.2	7.2	8.2	8.2	8.1	8.2
		Hi PR	239	240	241	245.5	276	277	278	282.4	314	315	317	321.0	356	357	359	362.6	401	402	403	407.4	449	450	451	455.3
		Lo PR	131	133	136	141.1	139	140	143	148.7	145	147	150	155.4	151	153	156	161.1	157	158	161	166.7	164	165	168	173.6
85	680	MBh	25.6	25.9	26.7	27.8	25.4	25.7	26.5	27.6	24.7	25.1	25.8	26.9	23.6	23.9	24.7	25.8	22.2	22.6	23.3	24.4	20.9	21.3	22.0	23.2
		S/T	1.00	0.91	0.77	0.6	1.00	1.00	0.78	0.6	1.00	1.00	0.80	0.7	1.00	1.00	0.82	0.7	1.00	1.00	1.00	0.7	1.00	1.00	1.00	0.7
		ΔT	31	29	26	22	31	29	26	22	31	29	26	22	31	29	26	22	31	29	25	22	32	30	27	23
		kW	1.30	1.30	1.30	1.3	1.44	1.44	1.44	1.5	1.60	1.60	1.60	1.6	1.78	1.78	1.77	1.8	1.97	1.97	1.97	2.0	2.20	2.20	2.19	2.2
		Amps	4.2	4.2	4.2	4.2	4.8	4.8	4.8	4.9	5.5	5.5	5.5	5.6	6.3	6.3	6.3	6.3	7.1	7.1	7.1	7.1	8.1	8.1	8.1	8.1
		Hi PR	235	236	238	242.0	272	273	275	278.9	311	312	313	317.5	352	353	355	359.1	397	398	400	403.9	445	446	448	451.7
		Lo PR	128	130	133	138.3	136	137	141	145.9	143	144	147	152.6	148	150	153	158.3	154	155	159	163.9	161	162	165	170.8
	780	MBh	25.9	26.3	27.0	28.2	25.7	26.0	26.8	27.9	25.0	25.4	26.1	27.3	23.9	24.3	25.0	26.2	22.5	22.9	23.6	24.8	21.3	21.6	22.4	23.5
		S/T	1.00	0.97	0.83	0.7	1.00	1.00	0.84	0.7	1.00	1.00	0.86	0.7	1.00	1.00	0.88	0.7	1.00	1.00	1.00	0.8	1.00	1.00	1.00	0.8
		ΔT	30	28	25	21	30	28	25	21	30	28	25	21	30	28	25	21	29	28	24	21	31	29	25	22
		kW	1.31	1.31	1.31	1.32	1.45	1.45	1.45	1.46	1.61	1.61	1.61	1.62	1.78	1.78	1.78	1.79	1.98	1.98	1.97	1.99	2.20	2.20	2.20	2.21
		Amps	4.2	4.2	4.2	4.3	4.9	4.9	4.8	4.9	5.6	5.6	5.5	5.6	6.3	6.3	6.3	6.3	7.2	7.1	7.1	7.2	8.1	8.1	8.1	8.2
		Hi PR	237	238	240	244.0	274	275	277	280.9	313	314	315	319.5	354	355	357	361.1	399	400	402	405.9	447	448	450	453.8
		Lo PR	130	132	135	140.2	138	139	142	147.8	144	146	149	154.5	150	152	155	160.2	156	157	160	165.8	163	164	167	172.7
	910	MBh	26.5	26.8	27.6	28.7	26.2	26.6	27.3	28.5	25.6	25.9	26.7	27.8	24.5	24.8	25.6	26.7	23.1	23.4	24.2	25.3	21.8	22.2	22.9	24.1
		S/T	1.00	1.00	0.87	0.7	1.00	1.00	0.88	0.7	1.00	1.00	0.91	0.8	1.00	1.00	0.93	0.8	1.00	1.00	1.00	0.8	1.00	1.00	1.00	0.9
		ΔT	29	27	23	20	28	27	23	20	29	27	24	20	28	27	23	20	28	26	23	20	29	28	24	21
		kW	1.32	1.32	1.31	1.3	1.46	1.46	1.46	1.5	1.62	1.62	1.62	1.6	1.79	1.79	1.79	1.8	1.99	1.98	1.98	2.0	2.21	2.21	2.21	2.2
		Amps	4.3	4.3	4.3	4.3	4.9	4.9	4.9	4.9	5.6	5.6	5.6	5.6	6.3	6.3	6.3	6.4	7.2	7.2	7.2	7.2	8.2	8.2	8.2	8.2
		Hi PR	240	241	243	246.6	277	278	279	283.5	315	316	318	322.1	357	358	360	363.7	402	403	404	408.5	450	451	452	456.4
		Lo PR	133	134	138	143.0	141	142	145	150.6	147	149	152	157.3	153	154	158	163.0	158	160	163	168.5	165	167	170	175.5

IDB = Entering Indoor Dry Bulb Temperature

High and low pressures are measured at the liquid and suction service valves.

Shaded area is AHRI conditions. Remove (TVA)

kW = Total system power

Amps = outdoor unit amps (comp.+fan)

Expanded Cooling Data — ASXC704810A*+CA*T4961*4A*+EEP - High Stage

			Outdoor Ambient Temperature																							
			65ºF				75ºF				85ºF				95ºF				105ºF				115ºF			
			Entering Indoor Wet Bulb Temperature																							
IDB	Airflow		59	63	67	71	59	63	67	71	59	63	67	71	59	63	67	71	59	63	67	71	59	63	67	71
70	1400	MBh	48.4	49.1	50.5	-	48.0	48.7	50.1	-	46.8	47.4	48.9	-	44.6	45.3	46.7	-	42.0	42.7	44.1	-	39.6	40.3	41.7	-
		S/T	0.62	0.55	0.42	-	0.63	0.56	0.43	-	0.65	0.58	0.45	-	0.67	0.60	0.47	-	1.00	0.62	0.49	-	1.00	0.67	0.54	-
		ΔT	20	18	15	-	20	18	14	-	20	18	15	-	20	18	14	-	20	18	14	-	21	19	15	-
		kW	2.82	2.81	2.81	-	3.13	3.12	3.12	-	3.48	3.47	3.47	-	3.85	3.85	3.84	-	4.27	4.27	4.26	-	4.77	4.76	4.76	-
		Amps	9.6	9.5	9.5	-	10.9	10.9	10.9	-	12.4	12.4	12.4	-	14.1	14.0	14.0	-	15.9	15.9	15.9	-	18.0	18.0	18.0	-
		Hi PR	239	240	242	-	276	277	279	-	315	316	318	-	358	359	360	-	403	404	406	-	452	453	454	-
		Lo PR	120	121	124	-	127	129	132	-	133	135	138	-	139	140	143	-	144	145	148	-	151	152	155	-
	1525	MBh	49.0	49.6	51.1	-	48.5	49.2	50.6	-	47.3	48.0	49.4	-	45.1	45.8	47.2	-	42.5	43.2	44.6	-	40.1	40.8	42.2	-
		S/T	0.65	0.58	0.45	-	0.65	0.58	0.46	-	0.68	0.61	0.48	-	0.70	0.62	0.50	-	1.00	0.64	0.52	-	1.00	0.69	0.57	-
		ΔT	19	17	14	-	19	17	14	-	20	18	14	-	19	17	14	-	19	17	13	-	20	18	15	-
		kW	2.83	2.82	2.82	-	3.14	3.13	3.13	-	3.49	3.48	3.48	-	3.86	3.86	3.85	-	4.28	4.28	4.27	-	4.78	4.77	4.77	-
		Amps	9.6	9.6	9.6	-	11.0	10.9	10.9	-	12.5	12.5	12.4	-	14.1	14.1	14.1	-	15.9	15.9	15.9	-	18.1	18.1	18.0	-
		Hi PR	240	241	243	-	278	279	280	-	317	318	320	-	359	360	362	-	404	405	407	-	453	454	456	-
		Lo PR	121	123	126	-	128	130	133	-	135	136	139	-	140	142	145	-	145	147	150	-	152	153	156	-
	1650	MBh	49.6	50.2	51.7	-	49.1	49.8	51.2	-	47.9	48.6	50.0	-	45.7	46.4	47.8	-	43.1	43.8	45.2	-	40.7	41.4	42.8	-
		S/T	0.66	0.59	0.46	-	0.67	0.60	0.47	-	0.69	0.62	0.49	-	0.71	0.64	0.51	-	1.00	0.66	0.53	-	1.00	0.71	0.58	-
		ΔT	19	17	13	-	19	17	13	-	19	17	13	-	19	17	13	-	18	16	13	-	20	18	14	-
		kW	2.83	2.83	2.83	-	3.15	3.14	3.14	-	3.49	3.49	3.49	-	3.87	3.87	3.86	-	4.29	4.29	4.28	-	4.78	4.78	4.78	-
		Amps	9.6	9.6	9.6	-	11.0	11.0	11.0	-	12.5	12.5	12.5	-	14.1	14.1	14.1	-	16.0	16.0	15.9	-	18.1	18.1	18.1	-
		Hi PR	242	243	244	-	279	280	282	-	318	319	321	-	360	361	363	-	406	407	409	-	454	455	457	-
		Lo PR	123	124	127	-	130	131	134	-	136	138	141	-	142	143	146	-	147	148	151	-	153	155	158	-
75	1400	MBh	48.5	49.1	50.6	52.8	48.0	48.7	50.1	52.3	46.8	47.5	48.9	51.1	44.6	45.3	46.8	48.9	42.0	42.7	44.1	46.3	39.6	40.3	41.7	43.9
		S/T	0.74	0.67	0.55	0.4	0.75	0.68	0.55	0.4	1.00	0.70	0.57	0.4	1.00	0.72	0.59	0.5	1.00	0.74	0.61	0.5	1.00	0.79	0.66	0.5
		ΔT	25	23	19	15	24	22	19	15	25	23	19	15	24	22	19	15	24	22	19	15	25	23	20	16
		kW	2.81	2.81	2.81	2.8	3.13	3.12	3.12	3.1	3.47	3.47	3.47	3.5	3.85	3.85	3.84	3.9	4.27	4.27	4.26	4.3	4.76	4.76	4.76	4.8
		Amps	9.5	9.5	9.5	9.6	10.9	10.9	10.9	11.0	12.4	12.4	12.4	12.5	14.1	14.0	14.0	14.1	15.9	15.9	15.8	15.9	18.0	18.0	18.0	18.1
		Hi PR	239	240	242	245.9	276	278	279	283.3	316	317	318	322.5	358	359	360	364.6	403	404	406	410.1	452	453	454	458.6
		Lo PR	120	121	124	129.5	127	129	132	136.7	133	135	138	143.0	139	140	143	148.3	144	145	148	153.5	151	152	155	160.1
	1525	MBh	49.0	49.7	51.1	53.3	48.6	49.2	50.7	52.9	47.3	48.0	49.4	51.6	45.2	**45.8**	47.3	49.5	42.5	43.2	44.7	46.8	40.2	40.8	42.3	44.4
		S/T	0.77	0.70	0.57	0.4	0.77	0.70	0.58	0.4	1.00	0.73	0.60	0.5	1.00	**0.74**	0.62	0.5	1.00	0.77	0.64	0.5	1.00	0.81	0.69	0.6
		ΔT	24	22	18	14	24	22	18	14	24	22	18	15	24	**22**	18	14	23	21	18	14	25	23	19	15
		kW	2.82	2.82	2.82	2.84	3.14	3.13	3.13	3.15	3.48	3.48	3.48	3.50	3.86	**3.86**	3.85	3.88	4.28	4.28	4.27	4.30	4.77	4.77	4.77	4.79
		Amps	9.6	9.6	9.6	9.7	10.9	10.9	10.9	11.0	12.5	12.4	12.4	12.5	14.1	**14.1**	14.1	14.2	15.9	15.9	15.9	16.0	18.1	18.1	18.0	18.1
		Hi PR	240	242	243	247.3	278	279	281	284.7	317	318	320	323.9	359	**360**	362	366.0	405	406	407	411.5	453	454	456	460.0
		Lo PR	121	123	126	130.8	129	130	133	138.0	135	136	139	144.3	140	**142**	145	149.6	145	147	150	154.9	152	153	156	161.4
	1650	MBh	49.6	50.3	51.7	53.9	49.2	49.8	51.3	53.5	47.9	48.6	50.0	52.2	45.8	46.4	47.9	50.1	43.1	43.8	45.2	47.4	40.7	41.4	42.9	45.0
		S/T	0.78	0.71	0.58	0.5	0.79	0.72	0.59	0.5	1.00	0.74	0.61	0.5	1.00	0.76	0.63	0.5	1.00	0.78	0.65	0.5	1.00	1.00	0.70	0.6
		ΔT	23	21	17	14	23	21	17	14	23	21	18	14	23	21	17	14	23	21	17	13	24	22	18	15
		kW	2.83	2.83	2.82	2.8	3.14	3.14	3.14	3.2	3.49	3.49	3.48	3.5	3.87	3.87	3.86	3.9	4.29	4.29	4.28	4.3	4.78	4.78	4.77	4.8
		Amps	9.6	9.6	9.6	9.7	11.0	11.0	10.9	11.1	12.5	12.5	12.5	12.6	14.1	14.1	14.1	14.2	16.0	15.9	15.9	16.0	18.1	18.1	18.1	18.2
		Hi PR	242	243	245	248.7	279	280	282	286.1	318	319	321	325.3	361	362	363	367.4	406	407	409	412.9	455	456	457	461.4
		Lo PR	123	124	127	132.3	130	131	134	139.5	136	138	141	145.8	142	143	146	151.1	147	148	151	156.3	153	155	158	162.9

IDB = Entering Indoor Dry Bulb Temperature

High and low pressures are measured at the liquid and suction service valves.

Shaded area is ACCA (TVA) conditions

kW = Total system power

Amps = outdoor unit amps (comp.+fan)

Expanded Cooling Data — ASXC704810A*+CA*T4961*4A*+EEP - High Stage (cont.)

			Outdoor Ambient Temperature																							
			65ºF				75ºF				85ºF				95ºF				105ºF				115ºF			
			Entering Indoor Wet Bulb Temperature																							
IDB	Airflow		59	63	67	71	59	63	67	71	59	63	67	71	59	63	67	71	59	63	67	71	59	63	67	71
80	1400	MBh	48.7	49.4	50.8	53.0	48.3	49.0	50.4	52.6	47.0	47.7	49.1	51.3	44.9	45.6	47.0	49.2	42.3	42.9	44.4	46.6	39.9	40.5	42.0	44.2
		S/T	0.86	0.79	0.66	0.5	1.00	0.80	0.67	0.5	1.00	0.82	0.69	0.6	1.00	0.84	0.71	0.6	1.00	1.00	0.73	0.6	1.00	1.00	0.78	0.6
		ΔT	29	27	23	19	29	27	23	19	29	27	23	20	29	27	23	19	29	27	23	19	30	28	24	20
		kW	2.82	2.81	2.81	2.8	3.13	3.12	3.12	3.1	3.47	3.47	3.47	3.5	3.85	3.85	3.84	3.9	4.27	4.27	4.26	4.3	4.77	4.76	4.76	4.8
		Amps	9.6	9.5	9.5	9.6	10.9	10.9	10.9	11.0	12.4	12.4	12.4	12.5	14.1	14.0	14.0	14.1	15.9	15.9	15.9	16.0	18.0	18.0	18.0	18.1
		Hi PR	240	241	242	246.4	277	278	280	283.7	316	317	319	322.9	358	359	361	365.1	404	405	406	410.5	452	453	455	459.0
		Lo PR	120	122	125	130.0	128	129	132	137.2	134	135	138	143.5	139	141	144	148.8	145	146	149	154.0	151	153	156	160.6
	1525	MBh	49.2	49.9	51.3	53.5	48.8	49.5	50.9	53.1	47.6	48.2	49.7	51.9	45.4	46.1	**47.5**	49.7	42.8	43.5	44.9	47.1	40.4	41.1	42.5	44.7
		S/T	0.89	0.81	0.69	0.6	1.00	0.82	0.69	0.6	1.00	0.84	0.72	0.6	1.00	0.86	**0.74**	0.6	1.00	1.00	0.76	0.6	1.00	1.00	0.80	0.7
		ΔT	28	26	22	19	28	26	22	19	28	26	23	19	28	26	**22**	19	28	26	22	18	29	27	23	20
		kW	2.83	2.82	2.82	2.84	3.14	3.13	3.13	3.15	3.48	3.48	3.48	3.50	3.86	3.86	**3.85**	3.88	4.28	4.28	4.27	4.30	4.77	4.77	4.77	4.79
		Amps	9.6	9.6	9.6	9.7	11.0	10.9	10.9	11.0	12.5	12.5	12.4	12.5	14.1	14.1	**14.1**	14.2	15.9	15.9	15.9	16.0	18.1	18.1	18.0	18.1
		Hi PR	241	242	244	247.8	278	279	281	285.1	317	318	320	324.3	360	361	**362**	366.5	405	406	408	411.9	454	455	456	460.4
		Lo PR	122	123	126	131.3	129	130	134	138.5	135	137	140	144.8	141	142	**145**	150.2	146	147	150	155.4	152	154	157	161.9
	1650	MBh	49.8	50.5	51.9	54.1	49.4	50.1	51.5	53.7	48.2	48.8	50.3	52.5	46.0	46.7	48.1	50.3	43.4	44.1	45.5	47.7	41.0	41.7	43.1	45.3
		S/T	1.00	0.83	0.70	0.6	1.00	0.83	0.71	0.6	1.00	0.86	0.73	0.6	1.00	0.88	0.75	0.6	1.00	1.00	0.77	0.6	1.00	1.00	0.82	0.7
		ΔT	27	26	22	18	27	25	22	18	28	26	22	18	27	25	22	18	27	25	21	18	28	26	23	19
		kW	2.83	2.83	2.83	2.9	3.15	3.14	3.14	3.2	3.49	3.49	3.49	3.5	3.87	3.87	3.86	3.9	4.29	4.29	4.28	4.3	4.78	4.78	4.78	4.8
		Amps	9.6	9.6	9.6	9.7	11.0	11.0	11.0	11.1	12.5	12.5	12.5	12.6	14.1	14.1	14.1	14.2	16.0	16.0	15.9	16.0	18.1	18.1	18.1	18.2
		Hi PR	242	243	245	249.2	280	281	282	286.5	319	320	322	325.7	361	362	364	367.9	407	408	409	413.3	455	456	458	461.8
		Lo PR	123	125	128	132.8	131	132	135	140.0	137	138	141	146.3	142	144	147	151.6	147	149	152	156.9	154	155	158	163.4
85	1400	MBh	49.5	50.2	51.6	53.8	49.1	49.8	51.2	53.4	47.8	48.5	50.0	52.1	45.7	46.4	47.8	50.0	43.1	43.8	45.2	47.4	40.7	41.4	42.8	45.0
		S/T	1.00	0.88	0.76	0.6	1.00	0.89	0.76	0.6	1.00	1.00	0.79	0.7	1.00	1.00	0.80	0.7	1.00	1.00	0.83	0.7	1.00	1.00	0.87	0.7
		ΔT	33	31	27	23	33	31	27	23	33	31	27	24	33	31	27	23	32	30	27	23	34	32	28	24
		kW	2.82	2.82	2.81	2.8	3.13	3.13	3.13	3.1	3.48	3.48	3.47	3.5	3.86	3.85	3.85	3.9	4.28	4.28	4.27	4.3	4.77	4.77	4.76	4.8
		Amps	9.6	9.6	9.5	9.6	10.9	10.9	10.9	11.0	12.4	12.4	12.4	12.5	14.1	14.1	14.0	14.2	15.9	15.9	15.9	16.0	18.1	18.0	18.0	18.1
		Hi PR	241	242	243	247.5	278	279	281	284.8	317	318	320	324.0	359	360	362	366.2	405	406	408	411.6	453	454	456	460.2
		Lo PR	122	124	127	131.8	129	131	134	139.0	136	137	140	145.3	141	143	146	150.6	146	148	151	155.8	153	154	157	162.4
	1525	MBh	50.1	50.7	52.2	54.3	49.6	50.3	51.7	53.9	48.4	49.0	50.5	52.7	46.2	46.9	48.3	50.5	43.6	44.3	45.7	47.9	41.2	41.9	43.3	45.5
		S/T	1.00	0.91	0.78	0.6	1.00	0.92	0.79	0.7	1.00	1.00	0.81	0.7	1.00	1.00	0.83	0.7	1.00	1.00	0.85	0.7	1.00	1.00	1.00	0.8
		ΔT	32	30	26	23	32	30	26	23	32	30	27	23	32	30	26	22	32	30	26	22	33	31	27	23
		kW	2.83	2.83	2.82	2.85	3.14	3.14	3.14	3.16	3.49	3.49	3.48	3.51	3.87	3.86	3.86	3.88	4.29	4.29	4.28	4.30	4.78	4.78	4.77	4.80
		Amps	9.6	9.6	9.6	9.7	11.0	11.0	10.9	11.0	12.5	12.5	12.5	12.6	14.1	14.1	14.1	14.2	16.0	15.9	15.9	16.0	18.1	18.1	18.1	18.2
		Hi PR	242	243	245	248.9	279	280	282	286.2	319	320	321	325.4	361	362	363	367.6	406	407	409	413.0	455	456	457	461.5
		Lo PR	124	125	128	133.1	131	132	135	140.3	137	139	142	146.6	142	144	147	151.9	148	149	152	157.2	154	156	159	163.7
	1650	MBh	50.6	51.3	52.8	54.9	50.2	50.9	52.3	54.5	49.0	49.6	51.1	53.3	46.8	47.5	48.9	51.1	44.2	44.9	46.3	48.5	41.8	42.5	43.9	46.1
		S/T	1.00	0.92	0.80	0.7	1.00	0.93	0.80	0.7	1.00	1.00	0.83	0.7	1.00	1.00	0.84	0.7	1.00	1.00	0.86	0.7	1.00	1.00	1.00	0.8
		ΔT	31	29	26	22	31	29	26	22	32	30	26	22	31	29	26	22	31	29	25	22	32	30	27	23
		kW	2.84	2.84	2.83	2.9	3.15	3.15	3.14	3.2	3.50	3.50	3.49	3.5	3.88	3.87	3.87	3.9	4.30	4.29	4.29	4.3	4.79	4.79	4.78	4.8
		Amps	9.7	9.7	9.6	9.7	11.0	11.0	11.0	11.1	12.5	12.5	12.5	12.6	14.2	14.2	14.1	14.2	16.0	16.0	16.0	16.1	18.1	18.1	18.1	18.2
		Hi PR	243	244	246	250.3	281	282	284	287.6	320	321	323	326.8	362	363	365	369.0	408	409	410	414.4	456	457	459	463.0
		Lo PR	125	127	130	134.6	132	134	137	141.8	139	140	143	148.1	144	145	148	153.4	149	151	154	158.6	156	157	160	165.2

IDB = Entering Indoor Dry Bulb Temperature

High and low pressures are measured at the liquid and suction service valves.

Shaded area is AHRI conditions. Remove (TVA)

kW = Total system power

Amps = outdoor unit amps (comp.+fan)

Expanded Cooling Data — ASXC704810A*+CA*T4961*4A*+EEP - Low Stage

			Outdoor Ambient Temperature																							
			65ºF				75ºF				85ºF				95ºF				105ºF				115ºF			
			Entering Indoor Wet Bulb Temperature																							
IDB	Airflow		59	63	67	71	59	63	67	71	59	63	67	71	59	63	67	71	59	63	67	71	59	63	67	71
70	940	MBh	34.5	34.9	36.0	-	34.2	34.6	35.7	-	33.3	33.7	34.8	-	31.7	32.2	33.2	-	29.8	30.3	31.3	0.0	28.1	28.6	29.6	-
		S/T	0.60	0.52	0.39	-	0.60	0.53	0.40	-	0.63	0.55	0.42	-	0.64	0.57	0.44	-	1.00	0.59	0.46	0.0	1.00	0.64	0.51	-
		ΔT	20	18	15	-	20	18	15	-	21	19	15	-	20	18	15	-	20	18	15	0	21	19	16	-
		kW	1.76	1.76	1.76	-	1.96	1.96	1.95	-	2.18	2.18	2.17	-	2.41	2.41	2.41	-	2.68	2.68	2.67	0.0	2.99	2.99	2.98	-
		Amps	6.0	6.0	6.0	-	6.8	6.8	6.8	-	7.8	7.8	7.8	-	8.8	8.8	8.8	-	10.0	10.0	9.9	0.0	11.3	11.3	11.3	-
		Hi PR	227	228	229	-	263	264	265	-	300	301	303	-	340	341	343	-	384	385	386	0.0	430	431	433	-
		Lo PR	122	123	126	-	129	131	134	-	136	137	140	-	141	143	146	-	147	148	151	0.0	153	155	158	-
	1045	MBh	34.8	35.3	36.3	-	34.5	35.0	36.0	-	33.6	34.1	35.1	-	32.1	32.6	33.6	-	30.2	30.7	31.7	0.0	28.5	29.0	30.0	-
		S/T	0.64	0.57	0.44	-	0.65	0.57	0.44	-	0.67	0.60	0.47	-	0.69	0.62	0.49	-	1.00	0.64	0.51	0.0	1.00	0.69	0.56	-
		ΔT	19	18	14	-	19	18	14	-	20	18	14	-	19	17	14	-	19	17	14	0	20	18	15	-
		kW	1.77	1.77	1.77	-	1.97	1.97	1.96	-	2.19	2.18	2.18	-	2.42	2.42	2.42	-	2.69	2.69	2.68	0.00	3.00	3.00	2.99	-
		Amps	6.0	6.0	6.0	-	6.9	6.9	6.8	-	7.8	7.8	7.8	-	8.8	8.8	8.8	-	10.0	10.0	10.0	0.0	11.3	11.3	11.3	-
		Hi PR	228	229	231	-	264	265	267	-	302	303	304	-	342	343	344	-	385	386	388	0.0	432	433	434	-
		Lo PR	123	125	128	-	131	132	135	-	137	139	142	-	143	144	147	-	148	150	153	0.0	155	156	159	-
	1150	MBh	35.3	35.7	36.8	-	35.0	35.4	36.5	-	34.1	34.5	35.6	-	32.5	33.0	34.0	-	30.6	31.1	32.1	0.0	28.9	29.4	30.4	-
		S/T	0.67	0.59	0.46	-	0.67	0.60	0.47	-	0.70	0.62	0.49	-	1.00	0.64	0.51	-	1.00	0.66	0.53	0.0	1.00	0.71	0.58	-
		ΔT	19	17	13	-	19	17	13	-	19	17	13	-	19	17	13	-	18	16	13	0	20	18	14	-
		kW	1.78	1.78	1.77	-	1.97	1.97	1.97	-	2.19	2.19	2.19	-	2.43	2.43	2.42	-	2.69	2.69	2.69	0.0	3.00	3.00	3.00	-
		Amps	6.0	6.0	6.0	-	6.9	6.9	6.9	-	7.8	7.8	7.8	-	8.9	8.9	8.9	-	10.0	10.0	10.0	0.0	11.4	11.4	11.4	-
		Hi PR	230	231	232	-	266	267	268	-	303	304	306	-	343	344	346	-	387	388	389	0.0	433	434	436	-
		Lo PR	125	126	129	-	132	134	137	-	139	140	143	-	144	146	149	-	150	151	154	0.0	156	158	161	-
75	940	MBh	34.5	35.0	36.0	37.6	34.2	34.7	35.7	37.3	33.3	33.8	34.8	36.4	31.7	32.2	33.2	34.8	29.8	30.3	31.4	32.9	28.1	28.6	29.6	31.2
		S/T	0.72	0.65	0.52	0.4	0.73	0.65	0.52	0.4	1.00	0.68	0.55	0.4	1.00	0.70	0.56	0.4	1.00	0.72	0.59	0.4	1.00	1.00	0.64	0.5
		ΔT	25	23	19	15	25	23	19	15	25	23	19	16	24	23	19	15	24	22	19	15	25	24	20	16
		kW	1.76	1.76	1.76	1.8	1.96	1.96	1.95	2.0	2.18	2.18	2.17	2.2	2.41	2.41	2.41	2.4	2.68	2.68	2.67	2.7	2.99	2.99	2.98	3.0
		Amps	6.0	6.0	5.9	6.0	6.8	6.8	6.8	6.9	7.8	7.8	7.8	7.8	8.8	8.8	8.8	8.8	10.0	9.9	9.9	10.0	11.3	11.3	11.3	11.3
		Hi PR	227	228	230	233.6	263	264	265	269.3	300	301	303	306.7	341	342	343	347.0	384	385	387	390.5	430	431	433	436.9
		Lo PR	122	123	126	131.6	129	131	134	139.0	136	137	140	145.5	141	143	146	151.0	147	148	151	156.4	153	155	158	163.1
	1045	MBh	34.9	35.3	36.4	37.9	34.5	35.0	36.1	37.6	33.6	34.1	35.2	36.7	32.1	**32.6**	33.6	35.2	30.2	30.7	31.7	33.3	28.5	29.0	30.0	31.6
		S/T	0.76	0.69	0.56	0.4	0.77	0.70	0.57	0.4	1.00	0.72	0.59	0.5	1.00	**0.74**	0.61	0.5	1.00	0.76	0.63	0.5	1.00	1.00	0.68	0.5
		ΔT	24	22	18	15	24	22	18	14	24	22	18	15	24	**22**	18	14	23	21	18	14	25	23	19	15
		kW	1.77	1.77	1.76	1.78	1.97	1.96	1.96	1.98	2.18	2.18	2.18	2.19	2.42	**2.42**	2.42	2.43	2.69	2.68	2.68	2.70	3.00	2.99	2.99	3.01
		Amps	6.0	6.0	6.0	6.0	6.9	6.9	6.8	6.9	7.8	7.8	7.8	7.9	8.8	**8.8**	8.8	8.9	10.0	10.0	10.0	10.0	11.3	11.3	11.3	11.4
		Hi PR	229	230	231	235.1	264	265	267	270.8	302	303	304	308.3	342	**343**	345	348.6	386	387	388	392.0	432	433	434	438.4
		Lo PR	123	125	128	133.1	131	132	135	140.5	137	139	142	147.0	143	**144**	147	152.4	148	150	153	157.8	155	156	159	164.5
	1150	MBh	35.3	35.8	36.8	38.4	35.0	35.5	36.5	38.1	34.1	34.6	35.6	37.2	32.5	33.0	34.0	35.6	30.6	31.1	32.2	33.7	28.9	29.4	30.4	32.0
		S/T	0.79	0.72	0.59	0.5	0.80	0.72	0.59	0.5	1.00	0.75	0.62	0.5	1.00	0.77	0.64	0.5	1.00	0.79	0.66	0.5	1.00	1.00	0.71	0.6
		ΔT	23	21	17	14	23	21	17	14	23	21	18	14	23	21	17	14	23	21	17	13	24	22	18	15
		kW	1.78	1.78	1.77	1.8	1.97	1.97	1.97	2.0	2.19	2.19	2.19	2.2	2.43	2.43	2.42	2.4	2.69	2.69	2.69	2.7	3.00	3.00	3.00	3.0
		Amps	6.0	6.0	6.0	6.1	6.9	6.9	6.9	6.9	7.8	7.8	7.8	7.9	8.9	8.9	8.8	8.9	10.0	10.0	10.0	10.1	11.4	11.4	11.3	11.4
		Hi PR	230	231	233	236.6	266	267	268	272.3	303	304	306	309.8	344	345	346	350.1	387	388	390	393.5	433	434	436	439.9
		Lo PR	125	126	129	134.7	132	134	137	142.1	139	140	143	148.5	144	146	149	154.0	150	151	154	159.4	156	158	161	166.1

IDB = Entering Indoor Dry Bulb Temperature

Shaded area is ACCA (TVA) conditions

kW = Total system power

High and low pressures are measured at the liquid and suction service valves.

Amps = outdoor unit amps (comp.+fan)

Expanded Cooling Data — ASXC704810A*+CA*T4961*4A*+EEP - Low Stage (cont.)

			Outdoor Ambient Temperature																							
			65ºF				75ºF				85ºF				95ºF				105ºF				115ºF			
			Entering Indoor Wet Bulb Temperature																							
IDB	Airflow		59	63	67	71	59	63	67	71	59	63	67	71	59	63	67	71	59	63	67	71	59	63	67	71
80	940	MBh	34.7	35.1	36.2	37.7	34.4	34.8	35.9	37.4	33.5	33.9	35.0	36.5	31.9	32.4	33.4	35.0	30.0	30.5	31.5	33.1	28.3	28.8	29.8	31.4
		S/T	0.84	0.77	0.64	0.5	1.00	0.77	0.64	0.5	1.00	0.80	0.67	0.5	1.00	0.82	0.69	0.5	1.00	1.00	0.71	0.6	1.00	1.00	0.76	0.6
		ΔT	29	27	23	20	29	27	23	20	29	27	24	20	29	27	23	20	28	27	23	19	30	28	24	21
		kW	1.76	1.76	1.76	1.8	1.96	1.96	1.95	2.0	2.18	2.18	2.17	2.2	2.41	2.41	2.41	2.4	2.68	2.68	2.67	2.7	2.99	2.99	2.98	3.0
		Amps	6.0	6.0	6.0	6.0	6.8	6.8	6.8	6.9	7.8	7.8	7.8	7.8	8.8	8.8	8.8	8.9	10.0	10.0	9.9	10.0	11.3	11.3	11.3	11.4
		Hi PR	227	228	230	234.0	263	264	266	269.7	301	302	303	307.2	341	342	344	347.5	384	385	387	390.9	431	432	433	437.3
		Lo PR	122	124	127	132.2	130	131	134	139.6	136	138	141	146.1	142	143	146	151.5	147	149	152	156.9	154	155	158	163.6
	1045	MBh	35.0	35.5	36.5	38.1	34.7	35.2	36.2	37.8	33.8	34.3	35.3	36.9	32.3	32.8	**33.8**	35.4	30.4	30.9	31.9	33.5	28.7	29.2	30.2	31.8
		S/T	1.00	0.81	0.68	0.5	1.00	0.82	0.69	0.5	1.00	0.84	0.71	0.6	1.00	0.86	**0.73**	0.6	1.00	1.00	0.75	0.6	1.00	1.00	0.80	0.7
		ΔT	28	26	22	19	28	26	22	19	28	26	23	19	28	26	**22**	19	28	26	22	18	29	27	23	20
		kW	1.77	1.77	1.77	1.78	1.97	1.97	1.96	1.98	2.19	2.18	2.18	2.20	2.42	2.42	**2.42**	2.43	2.69	2.69	2.68	2.70	3.00	3.00	2.99	3.01
		Amps	6.0	6.0	6.0	6.1	6.9	6.9	6.8	6.9	7.8	7.8	7.8	7.9	8.8	8.8	**8.8**	8.9	10.0	10.0	10.0	10.0	11.3	11.3	11.3	11.4
		Hi PR	229	230	232	235.5	265	266	267	271.3	302	303	305	308.7	342	343	**345**	349.0	386	387	389	392.5	432	433	435	438.8
		Lo PR	124	125	128	133.6	131	133	136	141.0	138	139	142	147.5	143	145	**148**	153.0	149	150	153	158.3	155	157	160	165.1
	1150	MBh	35.5	35.9	37.0	38.5	35.2	35.6	36.7	38.2	34.3	34.7	35.8	37.3	32.7	33.2	34.2	35.8	30.8	31.3	32.3	33.9	29.1	29.6	30.6	32.2
		S/T	1.00	0.84	0.71	0.6	1.00	0.84	0.71	0.6	1.00	0.87	0.74	0.6	1.00	1.00	0.76	0.6	1.00	1.00	0.78	0.6	1.00	1.00	0.83	0.7
		ΔT	27	25	22	18	27	25	22	18	27	25	22	18	27	25	22	18	27	25	21	18	28	26	22	19
		kW	1.78	1.78	1.77	1.8	1.97	1.97	1.97	2.0	2.19	2.19	2.19	2.2	2.43	2.43	2.42	2.4	2.69	2.69	2.69	2.7	3.00	3.00	3.00	3.0
		Amps	6.0	6.0	6.0	6.1	6.9	6.9	6.9	6.9	7.8	7.8	7.8	7.9	8.9	8.9	8.9	8.9	10.0	10.0	10.0	10.1	11.4	11.4	11.4	11.4
		Hi PR	230	231	233	237.0	266	267	269	272.8	304	305	306	310.2	344	345	347	350.5	387	388	390	394.0	434	435	436	440.3
		Lo PR	125	127	130	135.2	133	134	137	142.6	139	141	144	149.1	145	146	149	154.5	150	152	155	159.9	157	158	161	166.6
85	940	MBh	35.2	35.7	36.8	38.3	34.9	35.4	36.4	38.0	34.0	34.5	35.5	37.1	32.5	33.0	34.0	35.6	30.6	31.1	32.1	33.7	28.9	29.4	30.4	32.0
		S/T	1.00	0.86	0.73	0.6	1.00	0.87	0.74	0.6	1.00	1.00	0.76	0.6	1.00	1.00	0.78	0.6	1.00	1.00	0.80	0.7	1.00	1.00	1.00	0.7
		ΔT	33	31	27	23	32	31	27	23	33	31	27	24	32	31	27	23	32	30	27	23	33	31	28	24
		kW	1.77	1.77	1.76	1.8	1.96	1.96	1.96	2.0	2.18	2.18	2.18	2.2	2.42	2.42	2.41	2.4	2.68	2.68	2.68	2.7	2.99	2.99	2.99	3.0
		Amps	6.0	6.0	6.0	6.0	6.8	6.8	6.8	6.9	7.8	7.8	7.8	7.8	8.8	8.8	8.8	8.9	10.0	10.0	10.0	10.0	11.3	11.3	11.3	11.4
		Hi PR	229	230	231	235.0	264	265	267	270.8	302	303	304	308.2	342	343	345	348.5	385	386	388	392.0	432	433	434	438.4
		Lo PR	124	126	129	134.0	132	133	136	141.4	138	140	143	147.9	144	145	148	153.3	149	150	154	158.7	156	157	160	165.4
	1045	MBh	35.6	36.1	37.1	38.7	35.3	35.8	36.8	38.4	34.4	34.9	35.9	37.5	32.9	33.3	34.4	35.9	31.0	31.5	32.5	34.1	29.2	29.7	30.8	32.3
		S/T	1.00	0.91	0.78	0.6	1.00	0.91	0.78	0.6	1.00	1.00	0.81	0.7	1.00	1.00	0.83	0.7	1.00	1.00	0.85	0.7	1.00	1.00	1.00	0.8
		ΔT	32	30	26	22	32	30	26	22	32	30	26	23	32	30	26	22	31	29	26	22	32	31	27	23
		kW	1.77	1.77	1.77	1.78	1.97	1.97	1.97	1.98	2.19	2.19	2.18	2.20	2.43	2.42	2.42	2.44	2.69	2.69	2.69	2.70	3.00	3.00	3.00	3.01
		Amps	6.0	6.0	6.0	6.1	6.9	6.9	6.9	6.9	7.8	7.8	7.8	7.9	8.9	8.9	8.8	8.9	10.0	10.0	10.0	10.1	11.4	11.4	11.3	11.4
		Hi PR	230	231	233	236.6	266	267	268	272.3	303	304	306	309.8	344	345	346	350.1	387	388	390	393.5	433	434	436	439.9
		Lo PR	126	127	130	135.5	133	135	138	142.8	140	141	144	149.3	145	147	150	154.8	150	152	155	160.2	157	159	162	166.9
	1150	MBh	36.0	36.5	37.6	39.1	35.7	36.2	37.2	38.8	34.8	35.3	36.3	37.9	33.3	33.8	34.8	36.4	31.4	31.9	32.9	34.5	29.7	30.2	31.2	32.8
		S/T	1.00	0.94	0.81	0.7	1.00	1.00	0.81	0.7	1.00	1.00	0.84	0.7	1.00	1.00	0.85	0.7	1.00	1.00	0.88	0.7	1.00	1.00	1.00	0.8
		ΔT	31	29	25	22	31	29	25	22	31	29	26	22	31	29	25	22	31	29	25	21	32	30	26	23
		kW	1.78	1.78	1.78	1.8	1.98	1.98	1.97	2.0	2.20	2.19	2.19	2.2	2.43	2.43	2.43	2.4	2.70	2.70	2.69	2.7	3.01	3.01	3.00	3.0
		Amps	6.1	6.0	6.0	6.1	6.9	6.9	6.9	7.0	7.9	7.9	7.8	7.9	8.9	8.9	8.9	8.9	10.0	10.0	10.0	10.1	11.4	11.4	11.4	11.4
		Hi PR	232	233	234	238.1	267	268	270	273.8	305	306	307	311.3	345	346	348	351.6	389	389	391	395.0	435	436	437	441.4
		Lo PR	127	129	132	137.0	135	136	139	144.4	141	143	146	150.9	147	148	151	156.4	152	153	157	161.7	159	160	163	168.5

IDB = Entering Indoor Dry Bulb Temperature

High and low pressures are measured at the liquid and suction service valves.

Shaded area is AHRI conditions. Remove (TVA)

kW = Total system power

Amps = outdoor unit amps (comp.+fan)

Expanded Cooling Data – ASXC706010A*+CA*T4961*4A*+EEP - High Stage

			Outdoor Ambient Temperature																							
			65ºF				75ºF				85ºF				95ºF				105ºF				115ºF			
			Entering Indoor Wet Bulb Temperature																							
IDB	Airflow		59	63	67	71	59	63	67	71	59	63	67	71	59	63	67	71	59	63	67	71	59	63	67	71
70	1460	MBh	57.7	58.5	60.2	-	57.2	58.0	59.7	-	55.7	56.5	58.2	-	53.2	54.0	55.7	-	50.0	50.8	52.5	-	47.2	48.0	49.7	-
		S/T	0.61	0.54	0.41	-	0.61	0.54	0.42	-	0.63	0.56	0.44	-	0.65	0.58	0.46	-	0.67	0.60	0.48	-	0.72	0.65	0.53	-
		ΔT	22	20	16	-	22	20	16	-	22	20	16	-	22	20	16	-	22	20	16	-	23	21	17	-
		kW	3.32	3.32	3.31	-	3.71	3.71	3.70	-	4.15	4.15	4.14	-	4.63	4.63	4.62	-	5.16	5.16	5.15	-	5.79	5.78	5.78	-
		Amps	11.6	11.6	11.6	-	13.4	13.3	13.3	-	15.3	15.3	15.2	-	17.3	17.3	17.3	-	19.6	19.6	19.6	-	22.4	22.3	22.3	-
		Hi PR	248	249	251	-	287	288	290	-	328	329	331	-	372	373	374	-	419	420	422	-	469	470	472	-
		Lo PR	112	114	116	-	119	120	123	-	125	126	129	-	130	131	134	-	135	136	139	-	141	142	145	-
	1680	MBh	58.8	59.6	61.3	-	58.3	59.1	60.8	-	56.8	57.6	59.3	-	54.3	55.1	56.8	-	51.1	51.9	53.6	-	48.3	49.1	50.8	-
		S/T	0.64	0.57	0.45	-	0.65	0.58	0.45	-	0.67	0.60	0.48	-	0.69	0.62	0.49	-	0.71	0.64	0.51	-	0.75	0.68	0.56	-
		ΔT	21	19	15	-	21	19	15	-	21	19	15	-	21	19	15	-	21	18	14	-	22	20	16	-
		kW	3.34	3.34	3.33	-	3.74	3.73	3.73	-	4.18	4.17	4.17	-	4.65	4.65	4.64	-	5.18	5.18	5.17	-	5.81	5.80	5.80	-
		Amps	11.7	11.7	11.7	-	13.4	13.4	13.4	-	15.4	15.3	15.3	-	17.4	17.4	17.4	-	19.7	19.7	19.7	-	22.5	22.4	22.4	-
		Hi PR	251	252	254	-	290	291	292	-	330	331	333	-	374	375	377	-	421	422	424	-	472	473	475	-
		Lo PR	114	116	119	-	121	123	125	-	127	128	131	-	132	133	136	-	137	138	141	-	143	144	147	-
	1900	MBh	60.2	61.0	62.7	-	59.7	60.5	62.2	-	58.2	59.0	60.7	-	55.6	56.5	58.2	-	52.5	53.3	55.0	-	49.7	50.5	52.2	-
		S/T	0.64	0.58	0.45	-	0.65	0.58	0.46	-	0.67	0.60	0.48	-	0.69	0.62	0.50	-	0.71	0.64	0.52	-	1.00	0.69	0.57	-
		ΔT	20	18	14	-	20	18	13	-	20	18	14	-	20	18	13	-	19	17	13	-	21	19	15	-
		kW	3.36	3.36	3.35	-	3.75	3.75	3.74	-	4.19	4.19	4.18	-	4.67	4.67	4.66	-	5.20	5.20	5.19	-	5.83	5.82	5.82	-
		Amps	11.8	11.8	11.8	-	13.5	13.5	13.5	-	15.4	15.4	15.4	-	17.5	17.5	17.5	-	19.8	19.8	19.8	-	22.5	22.5	22.5	-
		Hi PR	253	254	256	-	292	293	295	-	333	334	336	-	377	378	379	-	424	425	427	-	474	475	477	-
		Lo PR	117	118	121	-	124	125	128	-	130	131	134	-	135	136	139	-	140	141	144	-	146	147	150	-
75	1460	MBh	57.8	58.6	60.3	62.9	57.2	58.0	59.8	62.4	55.8	56.6	58.3	60.9	53.2	54.0	55.7	58.3	50.1	50.9	52.6	55.2	47.2	48.0	49.7	52.3
		S/T	0.72	0.65	0.53	0.4	0.73	0.66	0.54	0.4	0.75	0.68	0.56	0.4	0.77	0.70	0.58	0.4	1.00	0.72	0.60	0.5	1.00	0.77	0.64	0.5
		ΔT	27	25	21	17	27	25	21	17	27	25	21	17	27	25	21	16	27	24	20	16	28	26	22	18
		kW	3.32	3.31	3.31	3.3	3.71	3.71	3.70	3.7	4.15	4.15	4.14	4.2	4.63	4.63	4.62	4.6	5.16	5.16	5.15	5.2	5.78	5.78	5.77	5.8
		Amps	11.6	11.6	11.6	11.7	13.3	13.3	13.3	13.4	15.3	15.2	15.2	15.3	17.3	17.3	17.3	17.4	19.6	19.6	19.6	19.7	22.4	22.3	22.3	22.4
		Hi PR	248	250	251	255.6	287	288	290	294.4	328	329	331	335.1	372	373	375	378.9	419	420	422	426.2	469	471	472	476.6
		Lo PR	112	114	116	121.2	119	120	123	127.9	125	126	129	133.8	130	131	134	138.8	135	136	139	143.7	141	142	145	149.8
	1680	MBh	58.9	59.7	61.4	64.0	58.4	59.2	60.9	63.5	56.9	57.7	59.4	62.0	54.3	**55.1**	56.8	59.4	51.2	52.0	53.7	56.3	48.3	49.1	50.8	53.4
		S/T	0.76	0.69	0.56	0.4	0.76	0.69	0.57	0.4	0.79	0.72	0.59	0.5	0.80	**0.73**	0.61	0.5	1.00	0.75	0.63	0.5	1.00	0.80	0.68	0.5
		ΔT	26	24	19	15	26	23	19	15	26	24	20	15	26	**23**	19	15	25	23	19	15	27	25	20	16
		kW	3.34	3.34	3.33	3.36	3.73	3.73	3.72	3.75	4.17	4.17	4.16	4.19	4.65	**4.65**	4.64	4.67	5.18	5.18	5.17	5.20	5.81	5.80	5.80	5.83
		Amps	11.7	11.7	11.7	11.8	13.4	13.4	13.4	13.5	15.3	15.3	15.3	15.4	17.4	**17.4**	17.4	17.5	19.7	19.7	19.7	19.8	22.4	22.4	22.4	22.5
		Hi PR	251	252	254	258.0	290	291	293	296.9	330	332	333	337.6	374	**375**	377	381.4	422	423	424	428.6	472	473	475	479.0
		Lo PR	114	116	119	123.4	121	123	125	130.1	127	128	131	136.0	132	**133**	136	141.0	137	138	141	145.9	143	144	147	152.0
	1900	MBh	60.2	61.0	62.7	65.3	59.7	60.5	62.2	64.8	58.2	59.0	60.7	63.3	55.7	56.5	58.2	60.8	52.6	53.4	55.1	57.7	49.7	50.5	52.2	54.8
		S/T	0.76	0.69	0.57	0.4	0.77	0.70	0.58	0.4	0.79	0.72	0.60	0.5	1.00	0.74	0.62	0.5	1.00	0.76	0.64	0.5	1.00	0.81	0.68	0.6
		ΔT	25	22	18	14	24	22	18	14	25	23	19	14	24	22	18	14	24	22	18	14	26	23	19	15
		kW	3.36	3.35	3.35	3.4	3.75	3.75	3.74	3.8	4.19	4.19	4.18	4.2	4.67	4.66	4.66	4.7	5.20	5.20	5.19	5.2	5.82	5.82	5.81	5.8
		Amps	11.8	11.8	11.8	11.9	13.5	13.5	13.5	13.6	15.4	15.4	15.4	15.5	17.5	17.5	17.4	17.6	19.8	19.8	19.8	19.9	22.5	22.5	22.5	22.6
		Hi PR	253	255	256	260.6	292	293	295	299.4	333	334	336	340.1	377	378	380	383.9	424	425	427	431.2	475	476	477	481.6
		Lo PR	117	118	121	126.0	124	125	128	132.7	130	131	134	138.6	135	136	139	143.6	140	141	144	148.5	146	147	150	154.6

IDB = Entering Indoor Dry Bulb Temperature

High and low pressures are measured at the liquid and suction service valves.

Shaded area is ACCA (TVA) conditions

kW = Total system power

Amps = outdoor unit amps (comp.+fan)

Expanded Cooling Data – ASXC706010A*+CA*T4961*4A*+EEP - High Stage (cont.)

			Outdoor Ambient Temperature																							
			65ºF				75ºF				85ºF				95ºF				105ºF				115ºF			
			Entering Indoor Wet Bulb Temperature																							
IDB	Airflow		59	63	67	71	59	63	67	71	59	63	67	71	59	63	67	71	59	63	67	71	59	63	67	71
80	1460	MBh	58.1	58.9	60.6	63.2	57.5	58.3	60.0	62.6	56.1	56.9	58.6	61.2	53.5	54.3	56.0	58.6	50.4	51.2	52.9	55.5	47.5	48.3	50.0	52.6
		S/T	0.84	0.77	0.64	0.5	0.84	0.77	0.65	0.5	1.00	0.80	0.67	0.5	1.00	0.81	0.69	0.6	1.00	0.83	0.71	0.6	1.00	0.88	0.76	0.6
		ΔT	32	30	26	21	32	30	26	21	32	30	26	22	32	30	26	21	31	29	25	21	33	31	27	22
		kW	3.32	3.32	3.31	3.3	3.71	3.71	3.70	3.7	4.15	4.15	4.14	4.2	4.63	4.63	4.62	4.7	5.16	5.16	5.15	5.2	5.79	5.78	5.78	5.8
		Amps	11.6	11.6	11.6	11.7	13.4	13.3	13.3	13.4	15.3	15.2	15.2	15.4	17.3	17.3	17.3	17.4	19.6	19.6	19.6	19.7	22.4	22.3	22.3	22.4
		Hi PR	249	250	252	256.0	288	289	291	294.9	328	330	331	335.6	372	373	375	379.4	420	421	422	426.6	470	471	473	477.0
		Lo PR	113	114	117	121.7	120	121	124	128.4	125	127	130	134.3	130	132	135	139.3	135	137	139	144.2	141	143	146	150.3
	1680	MBh	59.2	60.0	61.7	64.3	58.6	59.5	61.2	63.8	57.2	58.0	59.7	62.3	54.6	55.4	**57.1**	59.7	51.5	52.3	54.0	56.6	48.6	49.4	51.1	53.7
		S/T	0.87	0.80	0.68	0.5	0.88	0.81	0.68	0.6	1.00	0.83	0.71	0.6	1.00	0.85	**0.72**	0.6	1.00	0.87	0.74	0.6	1.00	0.91	0.79	0.7
		ΔT	31	28	24	20	30	28	24	20	31	29	25	20	30	28	**24**	20	30	28	24	20	32	29	25	21
		kW	3.34	3.34	3.33	3.36	3.73	3.73	3.72	3.75	4.17	4.17	4.16	4.20	4.65	4.65	**4.64**	4.67	5.18	5.18	5.17	5.20	5.81	5.80	5.80	5.83
		Amps	11.7	11.7	11.7	11.8	13.4	13.4	13.4	13.5	15.4	15.3	15.3	15.4	17.4	17.4	**17.4**	17.5	19.7	19.7	19.7	19.8	22.4	22.4	22.4	22.5
		Hi PR	251	252	254	258.5	290	291	293	297.3	331	332	334	338.0	375	376	**378**	381.8	422	423	425	429.1	472	473	475	479.5
		Lo PR	115	116	119	123.9	122	123	126	130.6	128	129	132	136.5	133	134	**137**	141.5	137	139	142	146.4	144	145	148	152.5
	1900	MBh	60.5	61.3	63.0	65.6	60.0	60.8	62.5	65.1	58.5	59.3	61.0	63.6	56.0	56.8	58.5	61.1	52.8	53.7	55.4	58.0	50.0	50.8	52.5	55.1
		S/T	0.88	0.81	0.68	0.6	1.00	0.81	0.69	0.6	1.00	0.84	0.71	0.6	1.00	0.85	0.73	0.6	1.00	0.87	0.75	0.6	1.00	1.00	0.80	0.7
		ΔT	29	27	23	19	29	27	23	19	30	27	23	19	29	27	23	19	29	27	23	19	30	28	24	20
		kW	3.36	3.36	3.35	3.4	3.75	3.75	3.74	3.8	4.19	4.19	4.18	4.2	4.67	4.67	4.66	4.7	5.20	5.20	5.19	5.2	5.82	5.82	5.82	5.8
		Amps	11.8	11.8	11.8	11.9	13.5	13.5	13.5	13.6	15.4	15.4	15.4	15.5	17.5	17.5	17.5	17.6	19.8	19.8	19.8	19.9	22.5	22.5	22.5	22.6
		Hi PR	254	255	257	261.0	293	294	296	299.9	333	335	336	340.6	377	378	380	384.4	425	426	427	431.6	475	476	478	482.0
		Lo PR	118	119	122	126.5	124	126	128	133.2	130	132	134	139.1	135	137	139	144.1	140	141	144	149.0	146	148	150	155.1
85	1460	MBh	59.0	59.8	61.5	64.1	58.5	59.3	61.0	63.6	57.0	57.8	59.5	62.1	54.5	55.3	57.0	59.6	51.3	52.1	53.8	56.4	48.5	49.3	51.0	53.6
		S/T	1.00	0.86	0.74	0.6	1.00	0.87	0.74	0.6	1.00	0.89	0.76	0.6	1.00	0.91	0.78	0.7	1.00	1.00	0.80	0.7	1.00	1.00	0.85	0.7
		ΔT	36	34	30	26	36	34	30	26	36	34	30	26	36	34	30	26	36	34	30	25	37	35	31	27
		kW	3.33	3.32	3.32	3.3	3.72	3.72	3.71	3.7	4.16	4.16	4.15	4.2	4.64	4.63	4.63	4.7	5.17	5.17	5.16	5.2	5.79	5.79	5.78	5.8
		Amps	11.7	11.7	11.6	11.8	13.4	13.4	13.3	13.5	15.3	15.3	15.3	15.4	17.4	17.4	17.3	17.5	19.7	19.7	19.6	19.8	22.4	22.4	22.4	22.5
		Hi PR	250	251	253	257.2	289	290	292	296.0	330	331	332	336.7	373	375	376	380.5	421	422	423	427.8	471	472	474	478.2
		Lo PR	114	116	119	123.3	121	123	125	130.1	127	128	131	136.0	132	133	136	140.9	137	138	141	145.8	143	144	147	152.0
	1680	MBh	60.1	60.9	62.6	65.2	59.6	60.4	62.1	64.7	58.1	58.9	60.6	63.2	55.6	56.4	58.1	60.7	52.4	53.2	54.9	57.5	49.6	50.4	52.1	54.7
		S/T	1.00	0.89	0.77	0.6	1.00	0.90	0.78	0.6	1.00	0.92	0.80	0.7	1.00	1.00	0.82	0.7	1.00	1.00	0.84	0.7	1.00	1.00	0.88	0.8
		ΔT	35	33	29	24	35	33	29	24	35	33	29	25	35	33	28	24	34	32	28	24	36	34	30	25
		kW	3.35	3.34	3.34	3.37	3.74	3.74	3.73	3.76	4.18	4.18	4.17	4.20	4.66	4.66	4.65	4.68	5.19	5.19	5.18	5.21	5.81	5.81	5.80	5.83
		Amps	11.8	11.7	11.7	11.8	13.5	13.5	13.4	13.6	15.4	15.4	15.3	15.5	17.5	17.4	17.4	17.5	19.8	19.8	19.7	19.9	22.5	22.5	22.4	22.6
		Hi PR	253	254	255	259.6	291	292	294	298.5	332	333	335	339.2	376	377	379	383.0	423	424	426	430.2	474	475	476	480.7
		Lo PR	117	118	121	125.5	123	125	128	132.3	129	131	133	138.2	134	136	138	143.1	139	141	143	148.0	145	147	149	154.2
	1900	MBh	61.5	62.3	64.0	66.6	61.0	61.8	63.5	66.1	59.5	60.3	62.0	64.6	56.9	57.7	59.4	62.0	53.8	54.6	56.3	58.9	51.0	51.8	53.5	56.1
		S/T	1.00	0.90	0.78	0.6	1.00	0.90	0.78	0.7	1.00	0.93	0.80	0.7	1.00	1.00	0.82	0.7	1.00	1.00	0.84	0.7	1.00	1.00	0.89	0.8
		ΔT	34	31	27	23	34	31	27	23	34	32	28	23	34	31	27	23	33	31	27	23	35	32	28	24
		kW	3.37	3.36	3.36	3.4	3.76	3.76	3.75	3.8	4.20	4.20	4.19	4.2	4.68	4.67	4.67	4.7	5.21	5.21	5.20	5.2	5.83	5.83	5.82	5.9
		Amps	11.8	11.8	11.8	11.9	13.5	13.5	13.5	13.6	15.5	15.4	15.4	15.6	17.5	17.5	17.5	17.6	19.8	19.8	19.8	19.9	22.6	22.5	22.5	22.6
		Hi PR	255	256	258	262.2	294	295	297	301.0	335	336	337	341.7	378	380	381	385.5	426	427	428	432.8	476	477	479	483.2
		Lo PR	119	121	123	128.1	126	127	130	134.9	132	133	136	140.7	137	138	141	145.7	142	143	146	150.6	148	149	152	156.7

IDB = Entering Indoor Dry Bulb Temperature

High and low pressures are measured at the liquid and suction service valves.

Shaded area is AHRI conditions. Remove (TVA)

kW = Total system power

Amps = outdoor unit amps (comp.+fan)

Expanded Cooling Data – ASXC706010A*+CA*T4961*4A*+EEP - Low Stage

			Outdoor Ambient Temperature																							
			65ºF				75ºF				85ºF				95ºF				105ºF				115ºF			
			Entering Indoor Wet Bulb Temperature																							
IDB	Airflow		59	63	67	71	59	63	67	71	59	63	67	71	59	63	67	71	59	63	67	71	59	63	67	71
70	1020	MBh	41.0	41.6	42.8	-	40.6	41.2	42.4	-	39.6	40.1	41.4	-	37.7	38.3	39.5	-	35.5	36.0	37.3	0.0	33.4	34.0	35.2	-
		S/T	0.57	0.50	0.37	-	0.58	0.50	0.38	-	0.60	0.53	0.40	-	0.62	0.55	0.42	-	0.64	0.57	0.44	0.0	1.00	0.62	0.49	-
		ΔT	23	21	17	-	23	20	17	-	23	21	17	-	23	20	17	-	22	20	16	0	24	21	18	-
		kW	2.08	2.07	2.07	-	2.32	2.32	2.32	-	2.60	2.60	2.60	-	2.90	2.90	2.89	-	3.24	3.23	3.23	0.0	3.63	3.63	3.62	-
		Amps	7.3	7.3	7.2	-	8.3	8.3	8.3	-	9.6	9.5	9.5	-	10.9	10.8	10.8	-	12.3	12.3	12.3	0.0	14.0	14.0	14.0	-
		Hi PR	235	236	238	-	273	274	275	-	312	313	314	-	353	354	356	-	399	400	401	0.0	447	448	449	-
		Lo PR	114	115	118	-	121	122	125	-	127	128	131	-	132	133	136	-	137	138	141	0.0	143	145	148	-
	1155	MBh	41.5	42.1	43.3	-	41.1	41.7	42.9	-	40.1	40.6	41.9	-	38.2	38.8	40.0	-	36.0	36.6	37.8	0.0	33.9	34.5	35.7	-
		S/T	0.62	0.55	0.42	-	0.63	0.56	0.43	-	0.65	0.58	0.45	-	0.67	0.60	0.47	-	0.69	0.62	0.49	0.0	1.00	0.67	0.54	-
		ΔT	21	19	15	-	21	19	15	-	22	20	16	-	21	19	15	-	21	19	15	0	22	20	16	-
		kW	2.09	2.09	2.08	-	2.34	2.33	2.33	-	2.61	2.61	2.61	-	2.91	2.91	2.91	-	3.25	3.25	3.24	0.00	3.64	3.64	3.63	-
		Amps	7.3	7.3	7.3	-	8.4	8.4	8.4	-	9.6	9.6	9.6	-	10.9	10.9	10.9	-	12.4	12.4	12.3	0.0	14.1	14.1	14.0	-
		Hi PR	237	238	240	-	274	275	277	-	313	314	316	-	355	356	358	-	400	401	403	0.0	449	450	451	-
		Lo PR	115	117	120	-	122	124	127	-	128	130	133	-	134	135	138	-	139	140	143	0.0	145	146	149	-
	1290	MBh	42.1	42.7	43.9	-	41.7	42.3	43.5	-	40.7	41.2	42.5	-	38.8	39.4	40.6	-	36.6	37.2	38.4	0.0	34.5	35.1	36.3	-
		S/T	0.65	0.58	0.45	-	0.66	0.59	0.46	-	0.68	0.61	0.48	-	0.70	0.63	0.50	-	0.72	0.65	0.52	0.0	1.00	0.70	0.57	-
		ΔT	20	18	14	-	20	18	14	-	21	19	15	-	20	18	14	-	20	18	14	0	21	19	15	-
		kW	2.10	2.10	2.09	-	2.35	2.34	2.34	-	2.62	2.62	2.62	-	2.92	2.92	2.92	-	3.26	3.26	3.25	0.0	3.65	3.65	3.64	-
		Amps	7.4	7.4	7.3	-	8.4	8.4	8.4	-	9.6	9.6	9.6	-	10.9	10.9	10.9	-	12.4	12.4	12.4	0.0	14.1	14.1	14.1	-
		Hi PR	239	240	242	-	276	277	279	-	315	316	318	-	357	358	360	-	402	403	405	0.0	450	451	453	-
		Lo PR	117	119	121	-	124	125	128	-	130	132	134	-	135	137	140	-	140	142	145	0.0	147	148	151	-
75	1020	MBh	41.0	41.6	42.8	44.7	40.7	41.2	42.5	44.3	39.6	40.2	41.4	43.3	37.7	38.3	39.5	41.4	35.5	36.1	37.3	39.2	33.4	34.0	35.2	37.1
		S/T	0.69	0.62	0.49	0.4	0.70	0.63	0.50	0.4	0.72	0.65	0.52	0.4	0.74	0.67	0.54	0.4	1.00	0.69	0.56	0.4	1.00	0.74	0.61	0.5
		ΔT	27	25	21	17	27	25	21	17	28	25	21	17	27	25	21	17	27	25	21	17	28	26	22	18
		kW	2.08	2.07	2.07	2.1	2.32	2.32	2.32	2.3	2.60	2.60	2.59	2.6	2.90	2.90	2.89	2.9	3.23	3.23	3.23	3.2	3.63	3.62	3.62	3.6
		Amps	7.3	7.3	7.2	7.3	8.3	8.3	8.3	8.4	9.5	9.5	9.5	9.6	10.8	10.8	10.8	10.9	12.3	12.3	12.3	12.4	14.0	14.0	14.0	14.1
		Hi PR	236	237	238	242.5	273	274	275	279.6	312	313	314	318.5	354	355	356	360.4	399	400	401	405.6	447	448	450	453.8
		Lo PR	114	115	118	123.0	121	122	125	129.9	127	128	131	136.0	132	133	136	141.1	137	138	141	146.1	143	145	148	152.4
	1155	MBh	41.5	42.1	43.3	45.2	41.2	41.7	43.0	44.8	40.1	40.7	41.9	43.8	38.2	**38.8**	40.1	41.9	36.0	36.6	37.8	39.7	33.9	34.5	35.7	37.6
		S/T	0.74	0.67	0.54	0.4	0.75	0.68	0.55	0.4	0.77	0.70	0.57	0.4	1.00	**0.72**	0.59	0.5	1.00	0.74	0.61	0.5	1.00	0.79	0.66	0.5
		ΔT	26	24	20	16	26	24	20	16	26	24	20	16	26	**24**	20	16	26	24	20	16	27	25	21	17
		kW	2.09	2.09	2.08	2.10	2.33	2.33	2.33	2.35	2.61	2.61	2.61	2.62	2.91	**2.91**	2.91	2.92	3.25	3.24	3.24	3.26	3.64	3.64	3.63	3.65
		Amps	7.3	7.3	7.3	7.4	8.4	8.4	8.4	8.4	9.6	9.6	9.6	9.7	10.9	**10.9**	10.9	11.0	12.4	12.3	12.3	12.4	14.1	14.1	14.0	14.1
		Hi PR	238	239	240	244.3	275	276	277	281.5	314	315	316	320.4	355	**356**	358	362.3	401	402	403	407.4	449	450	452	455.6
		Lo PR	115	117	120	124.6	122	124	127	131.5	128	130	133	137.6	134	**135**	138	142.7	139	140	143	147.7	145	146	149	154.0
	1290	MBh	42.1	42.7	43.9	45.8	41.8	42.3	43.6	45.4	40.7	41.3	42.5	44.4	38.8	39.4	40.7	42.5	36.6	37.2	38.4	40.3	34.5	35.1	36.3	38.2
		S/T	0.77	0.70	0.57	0.4	0.78	0.71	0.58	0.4	0.80	0.73	0.60	0.5	1.00	0.75	0.62	0.5	1.00	0.77	0.64	0.5	1.00	0.82	0.69	0.6
		ΔT	25	23	19	15	25	23	19	15	25	23	19	15	25	23	19	15	25	23	19	15	26	24	20	16
		kW	2.10	2.10	2.09	2.1	2.35	2.34	2.34	2.4	2.62	2.62	2.62	2.6	2.92	2.92	2.92	2.9	3.26	3.25	3.25	3.3	3.65	3.65	3.64	3.7
		Amps	7.4	7.3	7.3	7.4	8.4	8.4	8.4	8.5	9.6	9.6	9.6	9.7	10.9	10.9	10.9	11.0	12.4	12.4	12.4	12.5	14.1	14.1	14.1	14.2
		Hi PR	239	240	242	246.1	276	278	279	283.3	315	316	318	322.2	357	358	360	364.1	402	403	405	409.2	451	452	453	457.4
		Lo PR	117	119	121	126.3	124	125	128	133.2	130	132	134	139.3	135	137	140	144.4	140	142	145	149.4	147	148	151	155.7

IDB = Entering Indoor Dry Bulb Temperature

Shaded area is ACCA (TVA) conditions

kW = Total system power

High and low pressures are measured at the liquid and suction service valves.

Amps = outdoor unit amps (comp.+fan)

Expanded Cooling Data – ASXC706010A*+CA*T4961*4A*+EEP - Low Stage (cont.)

			Outdoor Ambient Temperature																							
			65ºF				75ºF				85ºF				95ºF				105ºF				115ºF			
			Entering Indoor Wet Bulb Temperature																							
IDB	Airflow		59	63	67	71	59	63	67	71	59	63	67	71	59	63	67	71	59	63	67	71	59	63	67	71
80	1020	MBh	41.2	41.8	43.0	44.9	40.9	41.4	42.7	44.5	39.8	40.4	41.6	43.5	38.0	38.5	39.8	41.6	35.7	36.3	37.5	39.4	33.7	34.2	35.5	37.3
		S/T	0.81	0.74	0.61	0.5	0.81	0.74	0.62	0.5	1.00	0.77	0.64	0.5	1.00	0.78	0.66	0.5	1.00	0.80	0.68	0.5	1.00	0.85	0.73	0.6
		ΔT	32	30	26	22	32	30	26	22	32	30	26	22	32	30	26	22	32	29	26	21	33	31	27	23
		kW	2.08	2.07	2.07	2.1	2.32	2.32	2.32	2.3	2.60	2.60	2.59	2.6	2.90	2.90	2.89	2.9	3.24	3.23	3.23	3.2	3.63	3.63	3.62	3.6
		Amps	7.3	7.3	7.2	7.3	8.3	8.3	8.3	8.4	9.5	9.5	9.5	9.6	10.9	10.8	10.8	10.9	12.3	12.3	12.3	12.4	14.0	14.0	14.0	14.1
		Hi PR	236	237	239	242.9	273	274	276	280.0	312	313	315	318.9	354	355	357	360.8	399	400	402	406.0	447	448	450	454.2
		Lo PR	114	116	119	123.5	121	123	126	130.4	127	129	132	136.5	132	134	137	141.6	138	139	142	146.7	144	145	148	152.9
	1155	MBh	41.7	42.3	43.5	45.4	41.4	42.0	43.2	45.0	40.3	40.9	42.1	44.0	38.5	39.0	**40.3**	42.1	36.2	36.8	38.0	39.9	34.2	34.7	36.0	37.8
		S/T	0.86	0.79	0.66	0.5	1.00	0.79	0.67	0.5	1.00	0.82	0.69	0.6	1.00	0.84	**0.71**	0.6	1.00	0.86	0.73	0.6	1.00	1.00	0.78	0.6
		ΔT	31	29	25	21	31	29	25	21	31	29	25	21	31	29	**25**	21	30	28	24	20	32	30	26	22
		kW	2.09	2.09	2.08	2.10	2.34	2.33	2.33	2.35	2.61	2.61	2.61	2.63	2.91	2.91	**2.91**	2.93	3.25	3.25	3.24	3.26	3.64	3.64	3.63	3.65
		Amps	7.3	7.3	7.3	7.4	8.4	8.4	8.4	8.5	9.6	9.6	9.6	9.7	10.9	10.9	**10.9**	11.0	12.4	12.3	12.3	12.4	14.1	14.1	14.0	14.1
		Hi PR	238	239	241	244.8	275	276	278	281.9	314	315	317	320.8	356	357	**359**	362.7	401	402	404	407.9	449	450	452	456.1
		Lo PR	116	117	120	125.1	123	124	127	132.0	129	130	133	138.1	134	135	**138**	143.2	139	140	143	148.2	145	147	150	154.5
	1290	MBh	42.3	42.9	44.1	46.0	42.0	42.6	43.8	45.6	40.9	41.5	42.7	44.6	39.1	39.6	40.9	42.7	36.8	37.4	38.6	40.5	34.8	35.3	36.6	38.4
		S/T	0.89	0.82	0.69	0.6	1.00	0.82	0.70	0.6	1.00	0.85	0.72	0.6	1.00	0.87	0.74	0.6	1.00	0.89	0.76	0.6	1.00	1.00	0.81	0.7
		ΔT	30	28	24	20	30	28	24	20	30	28	24	20	30	28	24	20	29	27	23	19	31	29	25	21
		kW	2.10	2.10	2.09	2.1	2.35	2.34	2.34	2.4	2.62	2.62	2.62	2.6	2.92	2.92	2.92	2.9	3.26	3.26	3.25	3.3	3.65	3.65	3.64	3.7
		Amps	7.4	7.4	7.3	7.4	8.4	8.4	8.4	8.5	9.6	9.6	9.6	9.7	10.9	10.9	10.9	11.0	12.4	12.4	12.4	12.5	14.1	14.1	14.1	14.2
		Hi PR	240	241	242	246.6	277	278	280	283.7	316	317	319	322.6	358	359	360	364.5	403	404	406	409.7	451	452	454	457.9
		Lo PR	118	119	122	126.8	125	126	129	133.7	131	132	135	139.8	136	137	140	144.9	141	142	145	149.9	147	149	151	156.2
85	1020	MBh	41.9	42.5	43.7	45.6	41.6	42.1	43.4	45.2	40.5	41.1	42.3	44.2	38.6	39.2	40.4	42.3	36.4	37.0	38.2	40.1	34.3	34.9	36.1	38.0
		S/T	1.00	0.83	0.70	0.6	1.00	0.84	0.71	0.6	1.00	0.86	0.73	0.6	1.00	1.00	0.75	0.6	1.00	1.00	0.77	0.6	1.00	1.00	0.82	0.7
		ΔT	36	34	30	26	36	34	30	26	36	34	30	26	36	34	30	26	36	34	30	26	37	35	31	27
		kW	2.08	2.08	2.07	2.1	2.33	2.33	2.32	2.3	2.61	2.60	2.60	2.6	2.91	2.90	2.90	2.9	3.24	3.24	3.23	3.3	3.63	3.63	3.63	3.6
		Amps	7.3	7.3	7.3	7.3	8.4	8.4	8.3	8.4	9.6	9.6	9.5	9.6	10.9	10.9	10.8	10.9	12.3	12.3	12.3	12.4	14.0	14.0	14.0	14.1
		Hi PR	237	238	240	244.0	274	275	277	281.1	313	314	316	320.0	355	356	358	361.9	400	401	403	407.1	449	450	451	455.3
		Lo PR	116	117	120	125.2	123	124	127	132.1	129	130	133	138.2	134	136	138	143.3	139	141	144	148.4	146	147	150	154.7
	1155	MBh	42.4	43.0	44.2	46.1	42.1	42.6	43.9	45.7	41.0	41.6	42.8	44.7	39.2	39.7	41.0	42.8	36.9	37.5	38.7	40.6	34.8	35.4	36.7	38.5
		S/T	1.00	0.88	0.76	0.6	1.00	0.89	0.76	0.6	1.00	0.91	0.79	0.7	1.00	1.00	0.80	0.7	1.00	1.00	0.82	0.7	1.00	1.00	0.87	0.7
		ΔT	35	33	29	25	35	33	29	25	35	33	29	25	35	33	29	25	35	32	28	24	36	34	30	26
		kW	2.09	2.09	2.09	2.11	2.34	2.34	2.33	2.35	2.62	2.62	2.61	2.63	2.92	2.92	2.91	2.93	3.25	3.25	3.25	3.26	3.64	3.64	3.64	3.66
		Amps	7.3	7.3	7.3	7.4	8.4	8.4	8.4	8.5	9.6	9.6	9.6	9.7	10.9	10.9	10.9	11.0	12.4	12.4	12.4	12.4	14.1	14.1	14.1	14.1
		Hi PR	239	240	242	245.9	276	277	279	283.0	315	316	318	321.9	357	358	360	363.8	402	403	405	409.0	450	451	453	457.2
		Lo PR	118	119	122	126.8	125	126	129	133.7	131	132	135	139.8	136	137	140	144.9	141	142	145	149.9	147	148	151	156.2
	1290	MBh	43.0	43.6	44.8	46.7	42.7	43.2	44.5	46.3	41.6	42.2	43.4	45.3	39.8	40.3	41.6	43.4	37.5	38.1	39.3	41.2	35.4	36.0	37.3	39.1
		S/T	1.00	0.91	0.79	0.7	1.00	0.92	0.79	0.7	1.00	0.94	0.82	0.7	1.00	1.00	0.83	0.7	1.00	1.00	0.85	0.7	1.00	1.00	0.90	0.8
		ΔT	34	32	28	24	34	32	28	24	34	32	28	24	34	32	28	24	33	31	27	23	35	33	29	25
		kW	2.10	2.10	2.10	2.1	2.35	2.35	2.34	2.4	2.63	2.63	2.62	2.6	2.93	2.93	2.92	2.9	3.26	3.26	3.26	3.3	3.65	3.65	3.65	3.7
		Amps	7.4	7.4	7.4	7.4	8.5	8.5	8.4	8.5	9.7	9.7	9.6	9.7	11.0	11.0	10.9	11.0	12.4	12.4	12.4	12.5	14.1	14.1	14.1	14.2
		Hi PR	241	242	244	247.7	278	279	281	284.8	317	318	320	323.7	359	360	362	365.6	404	405	407	410.8	452	453	455	459.0
		Lo PR	119	121	124	128.5	126	128	131	135.4	132	134	137	141.5	137	139	142	146.6	143	144	147	151.6	149	150	153	157.9

IDB = Entering Indoor Dry Bulb Temperature

High and low pressures are measured at the liquid and suction service valves.

Shaded area is AHRI conditions. Remove (TVA)

kW = Total system power

Amps = outdoor unit amps (comp.+fan)

ASXC702410A*+CA*TA2422*4A*+EEP - Low Stage Conditions: 80 °F IBD, 67 °F IWB @ 565 CFM				
Outdoor Tem. ° F.	Total Btuh	Sensible Btuh	Latent Btuh	Total Watts
75	17,580	12,410	7,638	980
80	17,360	12,470	7,260	1,040
85	17,140	12,530	6,882	1,090
90	16,770	12,410	6,520	1,150
95	**16,390**	**12,290**	**6,150**	**1,200**
100	15,940	12,120	5,750	1,270
105	15,480	11,950	5,346	1,330
110	15,060	12,000	4,700	1,410
115	14,640	12,040	4,054	1,480
TVA Conditions @ 95° OD DB, 75° ID DB 63° ID WB				
95	**15,810**	**12,020**	**5,720**	**1,200**

ASXC703610A*+CA*TA3626*4A*+EEP - Low Stage Conditions: 80 °F IBD, 67 °F IWB @ 780 CFM				
Outdoor Tem. ° F.	Total Btuh	Sensible Btuh	Latent Btuh	Total Watts
75	26,370	19,380	10,422	1,450
80	26,040	19,470	9,850	1,530
85	25,710	19,560	9,273	1,610
90	25,150	19,380	8,740	1,700
95	**24,590**	**19,200**	**8,200**	**1,780**
100	23,910	18,930	7,610	1,880
105	23,220	18,660	7,029	1,970
110	22,590	18,740	6,050	2,090
115	21,960	18,810	5,075	2,200
TVA Conditions @ 95° OD DB, 75° ID DB 63° ID WB				
95	**23,710**	**18,760**	**7,570**	**1,780**

ASXC704810A*+CA*T4961*4A*+EEP - Low Stage Conditions: 80 °F IBD, 67 °F IWB @ 1045 CFM				
Outdoor Tem. ° F.	Total Btuh	Sensible Btuh	Latent Btuh	Total Watts
75	36,240	24,880	15,610	1,960
80	35,790	25,000	14,840	2,070
85	35,340	25,120	14,060	2,180
90	34,570	24,890	13,330	2,300
95	**33,790**	**24,650**	**12,590**	**2,420**
100	32,850	24,300	11,780	2,550
105	31,910	23,950	10,960	2,680
110	31,050	24,050	9,650	2,840
115	30,180	24,150	8,330	2,990
TVA Conditions @ 95° OD DB, 75° ID DB 63° ID WB				
95	**32,590**	**24,090**	**11,710**	**2,420**

ASXC706010A*+CA*T4961*4A*+EEP - Low Stage Conditions: 80 °F IBD, 67 °F IWB @ 1155 CFM				
Outdoor Tem. ° F.	Total Btuh	Sensible Btuh	Latent Btuh	Total Watts
75	43,170	28,810	19,310	2,330
80	42,640	28,950	18,400	2,470
85	42,100	29,080	17,480	2,610
90	41,180	28,810	16,600	2,760
95	**40,260**	**28,540**	**15,720**	**2,910**
100	39,140	28,140	14,750	3,080
105	38,010	27,730	13,770	3,240
110	36,990	27,850	12,210	3,440
115	35,960	27,960	10,650	3,630
TVA Conditions @ 95° OD DB, 75° ID DB 63° ID WB				
95	**38,830**	**27,890**	**14,660**	**2,910**

ASXC702410A*+CA*TA2422*4A*+EEP - High Stage Conditions: 80 °F IBD, 67 °F IWB @ 800 CFM				
Outdoor Tem. ° F.	Total Btuh	Sensible Btuh	Latent Btuh	Total Watts
75	24,448	16,810	7,638	1,560
80	24,140	16,890	7,260	1,650
85	23,842	16,960	6,882	1,730
90	23,320	16,810	6,520	1,820
95	**22,800**	**16,650**	**6,150**	**1,910**
100	22,160	16,420	5,750	2,010
105	21,526	16,180	5,346	2,110
110	20,940	16,250	4,700	2,230
115	20,364	16,310	4,054	2,350
TVA Conditions @ 95° OD DB, 75° ID DB 63° ID WB				
95	**21,990**	**16,270**	**5,720**	**1,910**

ASXC703610A*+CA*TA3626*4A*+EEP - High Stage Conditions: 80 °F IBD, 67 °F IWB @ 1200 CFM				
Outdoor Tem. ° F.	Total Btuh	Sensible Btuh	Latent Btuh	Total Watts
75	36,672	26,250	10,422	2,300
80	36,220	26,370	9,850	2,430
85	35,763	26,490	9,273	2,550
90	34,980	26,250	8,740	2,690
95	**34,200**	**26,000**	**8,200**	**2,830**
100	33,240	25,630	7,610	2,980
105	32,289	25,260	7,029	3,130
110	31,420	25,370	6,050	3,310
115	30,545	25,470	5,075	3,490
TVA Conditions @ 95° OD DB, 75° ID DB 63° ID WB				
95	**32,980**	**25,410**	**7,570**	**2,830**

ASXC704810A*+CA*T4961*4A*+EEP - High Stage Conditions: 80 °F IBD, 67 °F IWB @ 1525 CFM				
Outdoor Tem. ° F.	Total Btuh	Sensible Btuh	Latent Btuh	Total Watts
75	50,920	35,310	15,610	3,130
80	50,300	35,460	14,840	3,310
85	49,670	35,610	14,060	3,480
90	48,600	35,270	13,330	3,670
95	**47,520**	**34,930**	**12,590**	**3,850**
100	46,210	34,440	11,780	4,060
105	44,900	33,940	10,960	4,270
110	43,700	34,060	9,650	4,520
115	42,500	34,170	8,330	4,770
TVA Conditions @ 95° OD DB, 75° ID DB 63° ID WB				
95	**45,850**	**34,140**	**11,710**	**3,860**

ASXC706010A*+CA*T4961*4A*+EEP - High Stage Conditions: 80 °F IBD, 67 °F IWB @ 1680 CFM				
Outdoor Tem. ° F.	Total Btuh	Sensible Btuh	Latent Btuh	Total Watts
75	61,150	41,840	19,310	3,720
80	60,410	42,010	18,400	3,940
85	59,660	42,180	17,480	4,160
90	58,380	41,780	16,600	4,400
95	**57,100**	**41,380**	**15,720**	**4,640**
100	55,540	40,800	14,750	4,910
105	53,980	40,210	13,770	5,170
110	52,550	40,340	12,210	5,490
115	51,120	40,470	10,650	5,800
TVA Conditions @ 95° OD DB, 75° ID DB 63° ID WB				
95	**55,110**	**40,450**	**14,660**	**4,650**

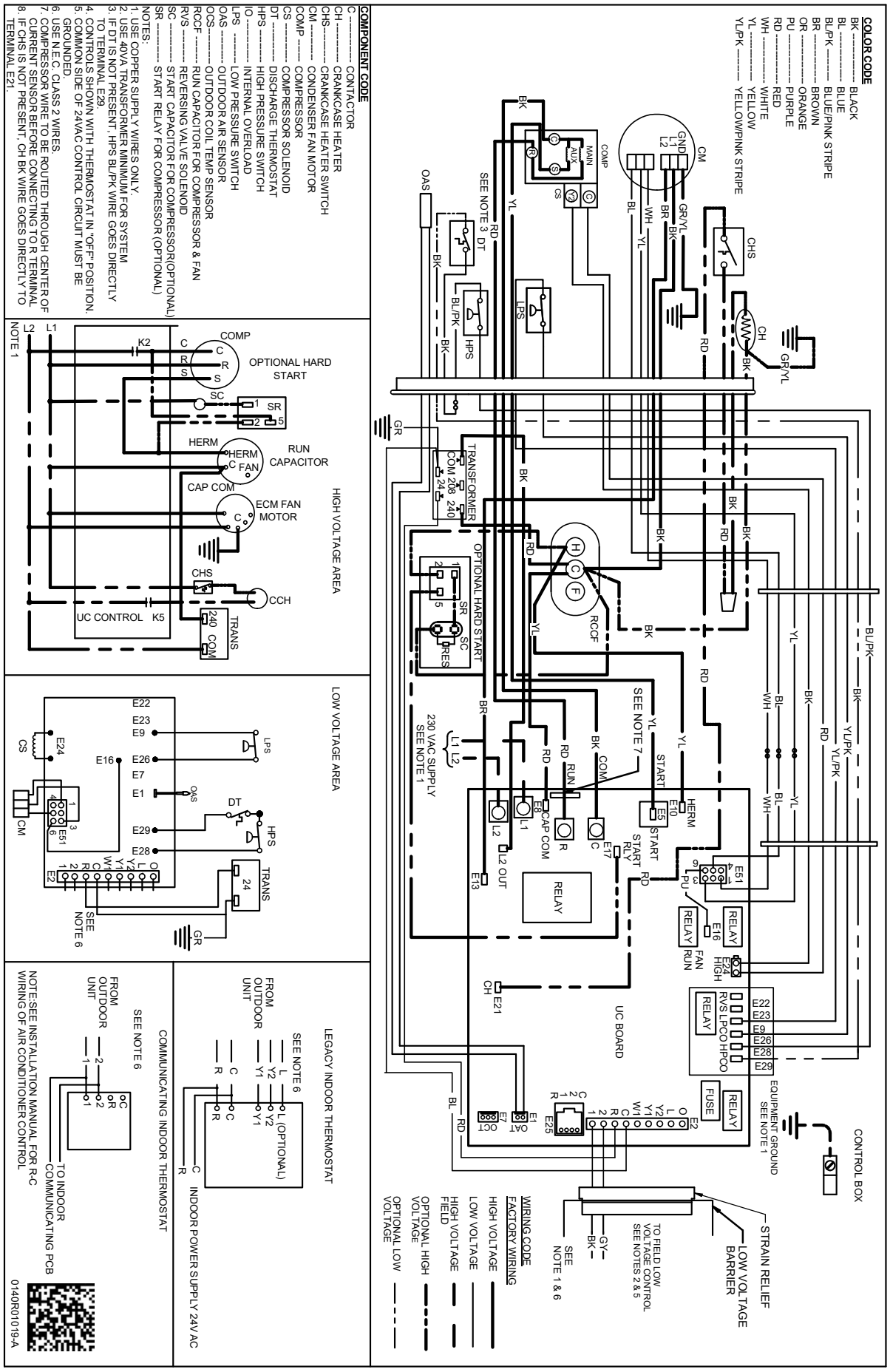

WARNING

High Voltage: Disconnect all power before servicing or installing this unit. Multiple power sources may be present. Failure to do so may cause property damage, personal injury, or death.

Wiring is subject to change. Always refer to the wiring diagram or the unit for the most up-to-date wiring.

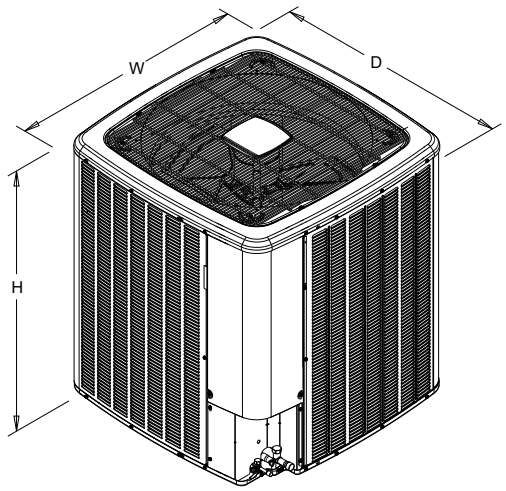

Model	Dimensions		
	W"	D"	H"
ASXC702410A*	35½	35½	39½
ASXC703610A*	35½	35½	39½
ASXC704810A*	35½	35½	41⅝
ASXC706010A*	35½	35½	41⅝

ECN	REV	ZONE	DESCRIPTION	CHK	DR	DATE

GSXC706010

Daikin Comfort Technologies Manufacturing, L.P.

DRAWING TO BE INTERPRETED IN ACCORDANCE WITH ASME Y14.100

DIMENSIONS ARE IN INCHES UNLESS OTHERWISE NOTED.

TITLE: ASXC7

TOLERANCES UNLESS OTHERWISE NOTED
ANGLES ± 1.0°
.X ± .1
.XX ± .03
.XXX ± .015
HOLES Ø ± .005
TUBE CUT LG. ± .063

DWN: RDL | ENG: RP | SCALE: NTS
DATE: 03-25-22 | CHK: SK | SHEET: 1 OF 1
DWG. NO.

SPECIAL CHARACTERISTICS: (REFER MSP 822-01 FOR DETAILS)
◇ = CRITICAL CHARACTERISTIC REQUIRES AN INITIAL CPK OF 1.33 AND USE OF STATISTICAL PROCESS CONTROL.
⬡ = SIGNIFICANT CHARACTERISTIC REQUIRES AN INITIAL CPK OF 1.00 AND USE OF STATISTICAL PROCESS CONTROL. INABILITY TO MEET THE REQUIRED INITIAL CPK VALUE WILL REQUIRE 100% INSPECTION.

COMPONENTS AND MATERIALS SPECIFIED HEREIN WILL ALSO CONFORM TO THE APPLICABLE SECTION OF GOODMAN MSP 860-01 WORKMANSHIP STANDARD.

CONFIDENTIAL PROPERTY OF GOODMAN MANUFACTURING COMPANY, L.P. OR ITS AFFILIATES NOT TO BE DISCLOSED TO OTHERS, COPIED, OR USED FOR ANY PURPOSE EXCEPT AS AUTHORIZED IN WRITING. MUST BE RETURNED UPON DEMAND, ON COMPLETION OF ORDER, OR OTHER PURPOSE FOR WHICH IT WAS LENT.

Accessories

Model	Description	ASXC7 02410A*	ASXC7 03610A*	ASXC7 04810A*	ASXC7 06010A*
ABK-20	Anchor Bracket Kit ^	X	X	X	X
ASC-01	Anti-Short Cycle Kit	X	X	X	X
CSR-U-1	Hard-start Kit	X	X		
CSR-U-2	Hard-start Kit			X	
CSR-U-3	Hard-start Kit				X
FSK01A[1]	Freeze Protection Kit	X	X	X	X
LSK02A[2]	Liquid Line Solenoid Kit	X	X	X	X
OT18-60A	Outdoor Thermostat/Lockout Thermostat	X	X	X	X
TXV-FX-KX-2T[2]	TXV Kit	X			
TXV-FX-KX-3T[2]	TXV Kit		X		
TXV-FX-KX-5T[2]	TXV Kit			X	X

^ Contains 20 brackets; four brackets needed to anchor unit to pad

[1] Installed on indoor coil

[2] Condensing units and heat pumps with reciprocating or rotary compressors require the use of start-assist components when used in conjunction with an indoor coil using a non-bleed thermal expansion valve refrigerant metering device or liquid solenoid kit. The TXV should always be sized based on the tonnage of the outdoor unit.

All AHRI system ratings are accessible in the System Configurator tool via PartnerLink.

Amana® is a registered trademark of Maytag Corporation or its related companies and is used under license. All rights reserved.
Our continuing commitment to quality products may mean a change in specifications without notice.
©2022 **DAIKIN COMFORT TECHNOLOGIES MANUFACTURING, L.P.** • Houston, Texas • Printed in the USA.